THE FIRST CONSIDERATION TO MAKE WHEN SPECIFYING A FRONTIER SYSTEM IS THE INSTALLATION METHOD.

1. DIRECT FIXED TO CEILING

SEE PAGE 2

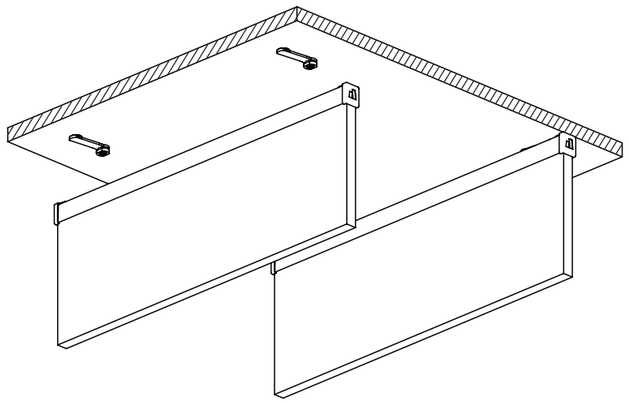

PACK INCLUDES
Autex Mounting Clips
Autex Frontier Extrusions
Autex Frontier Fins/Rafts

NOT SUPPLIED
Fasteners (to substrate)

2. DIRECT FIXED TO RAILS

SEE PAGE 3

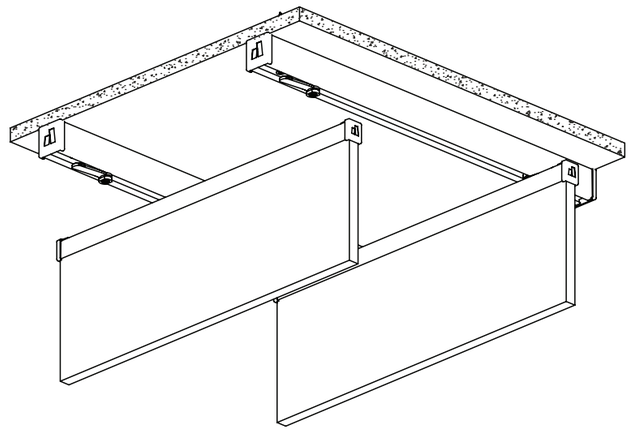

PACK INCLUDES
Autex Mounting Clips
Autex Frontier Extrusions
Autex Frontier Fins/Rafts

ADDITIONAL COMPONENTS REQUIRED
Autex Frontier Cross Rails x2

NOT SUPPLIED
Fasteners (to substrate)

3. SUSPENDED RAILS

SEE PAGE 4

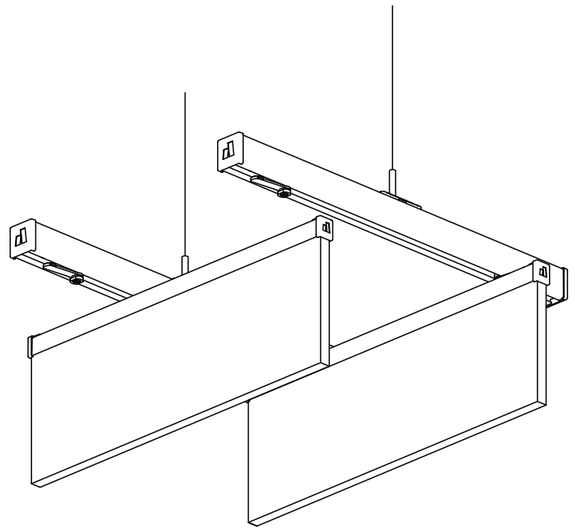

PACK INCLUDES
Autex Mounting Clips
Autex Frontier Extrusions
Autex Frontier Fins/Rafts

ADDITIONAL COMPONENTS REQUIRED
Autex Frontier Cross Rails x2
Autex W-Clips

NOT SUPPLIED
Fasteners (to substrate)
M6 Threaded Rod
M6 Back Plates to ceiling

For suspended installations it is strongly recommended to consult a building engineer for seismic considerations. See page 11 for suggested details.
For all installations in sprinklered buildings, consult a fire engineer to ensure the intended position of the Frontier Fins/Rafts meet sprinkler and alarm standards.
Further detail on the fire standards can be found in the supplemental document "Fire Considerations for Autex Frontier Acoustic Fins".

1.

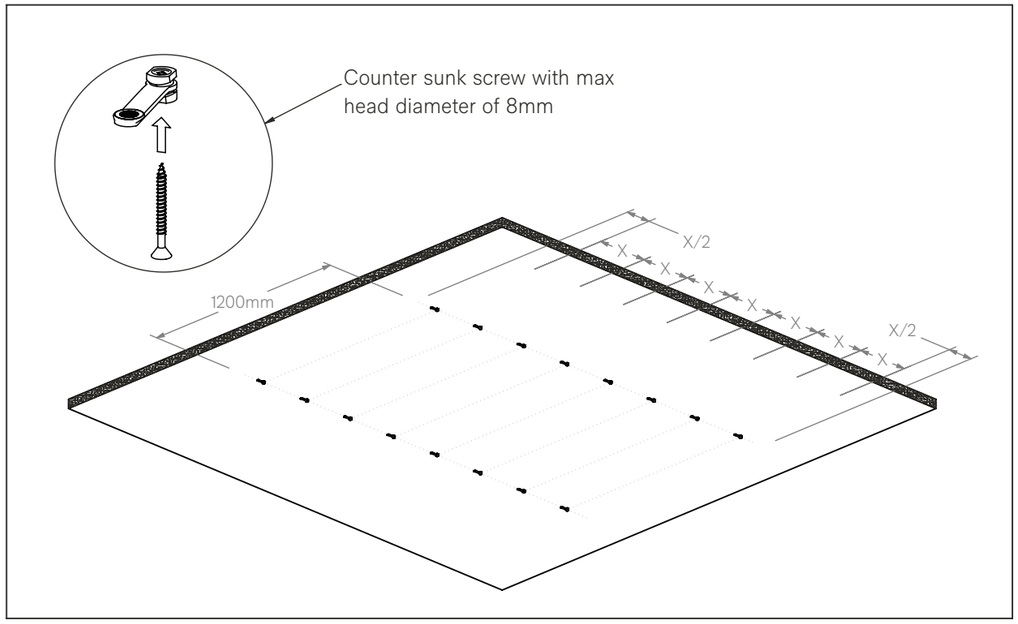

Mark out your ceiling at the recommended spacing for your chosen product (refer to table on page 29 for details). Screw the Autex Mounting Clips into the ceiling using screws suitable for the substrate (not supplied).

2.

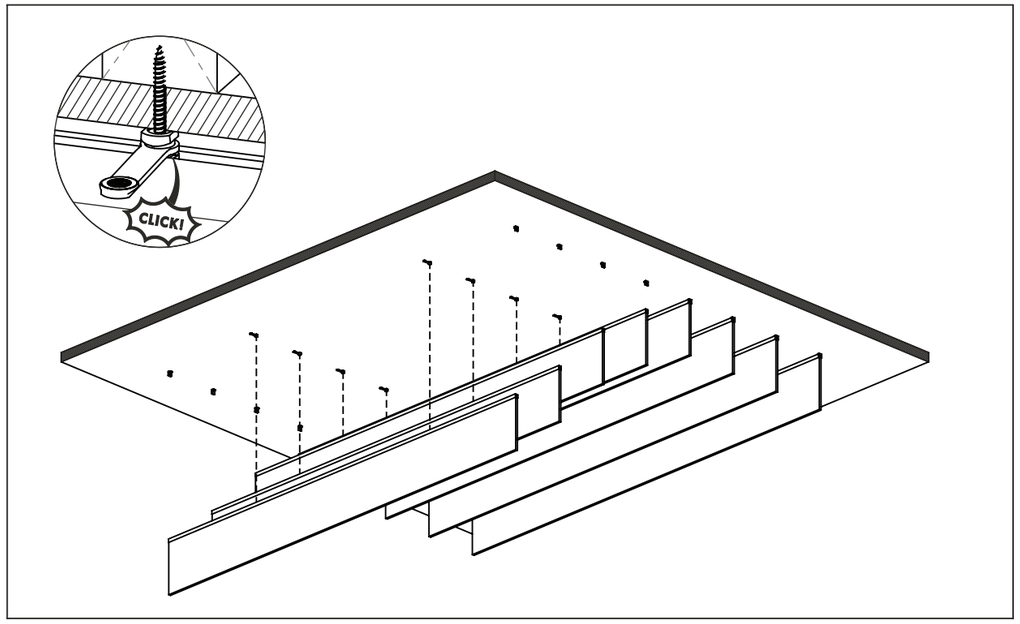

Lift the assembled Fins/Rafts into place and click them onto the Autex Mounting Clips. Turn the clips 45° to temporarily hold the Fin/Raft in place while allowing adjustment along the length.

3.

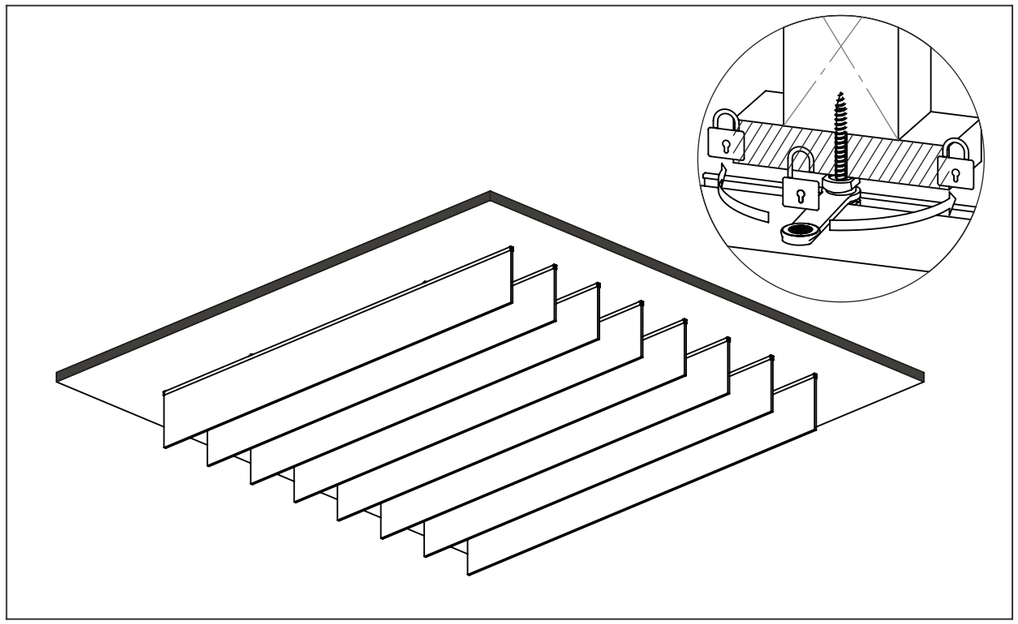

When you are satisfied with the alignment of the Fins/Rafts turn the clips 90° so they clip into the channel and lock in place.

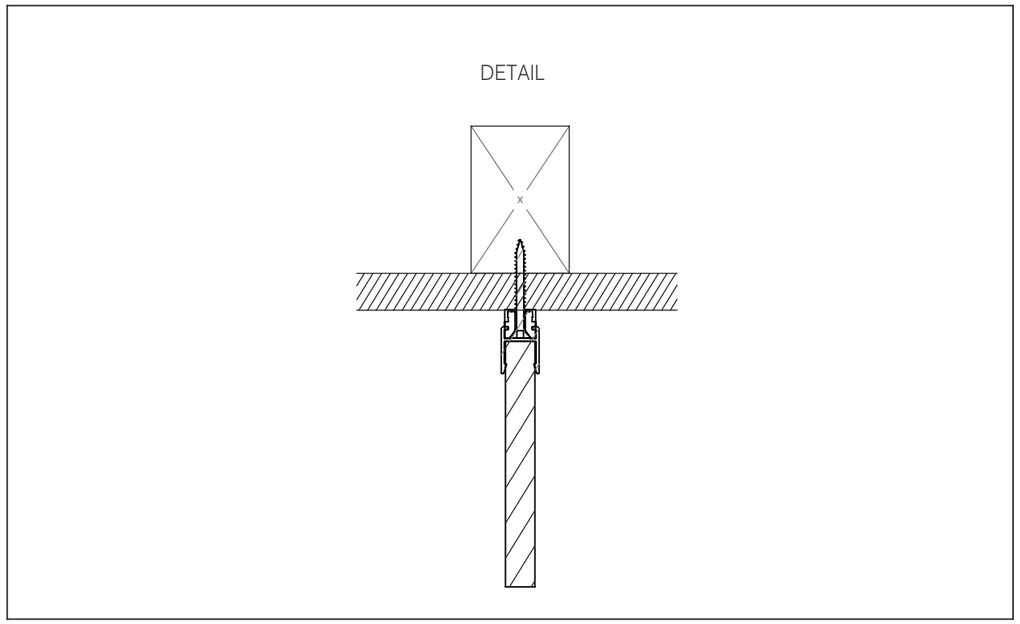

Ensure suitable fastener for the clip and substrate is used (not supplied).

1.

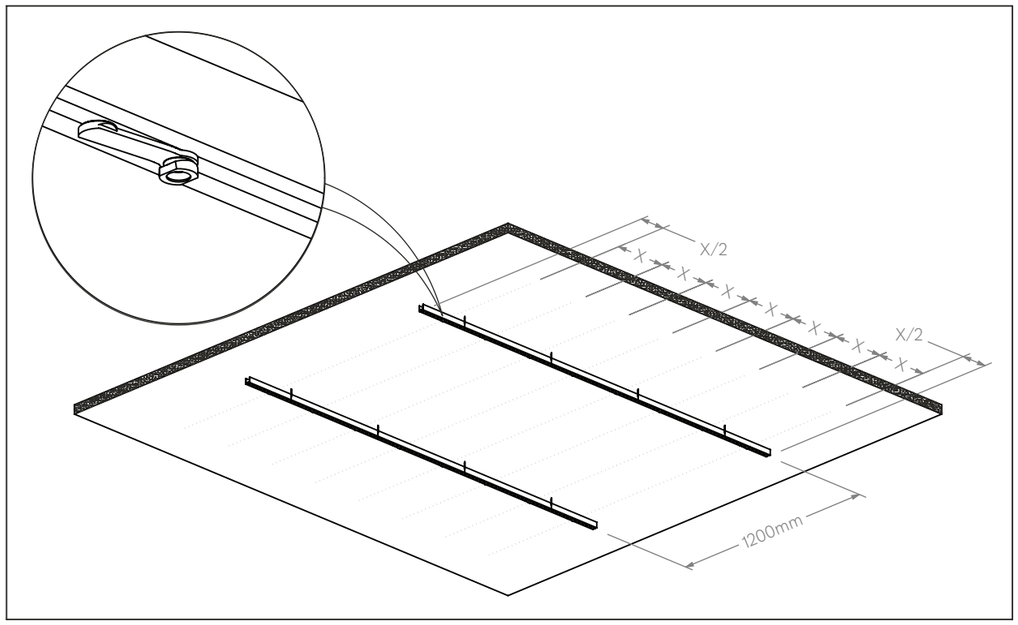

Mark out the ceiling and screw in 2x cross rails at 1200mm centres using screws suitable for the substrate (not supplied) at max centres of 600mm. Insert the Autex Mounting Clips at the desired fin spacing. Fin spacing can be marked on the cross rails prior to installation. (Refer to table on page 29 for details).

2.

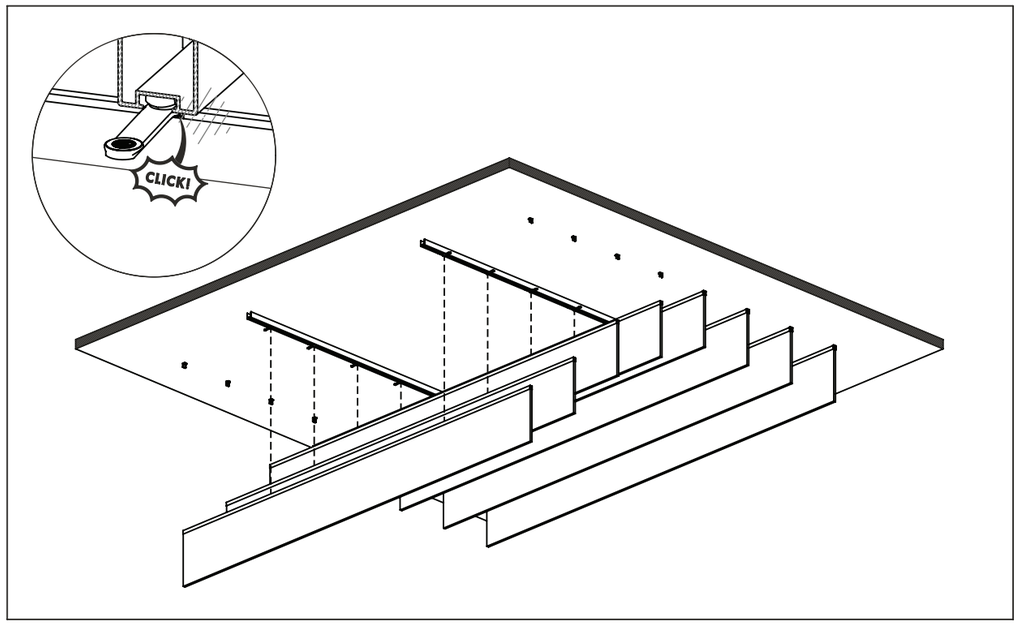

Lift the assembled Fins/Rafts into place and click them onto the Autex Mounting Clips. Turn the clips 45° to temporarily hold the Fin/Raft in place while allowing adjustment along the length.

3.

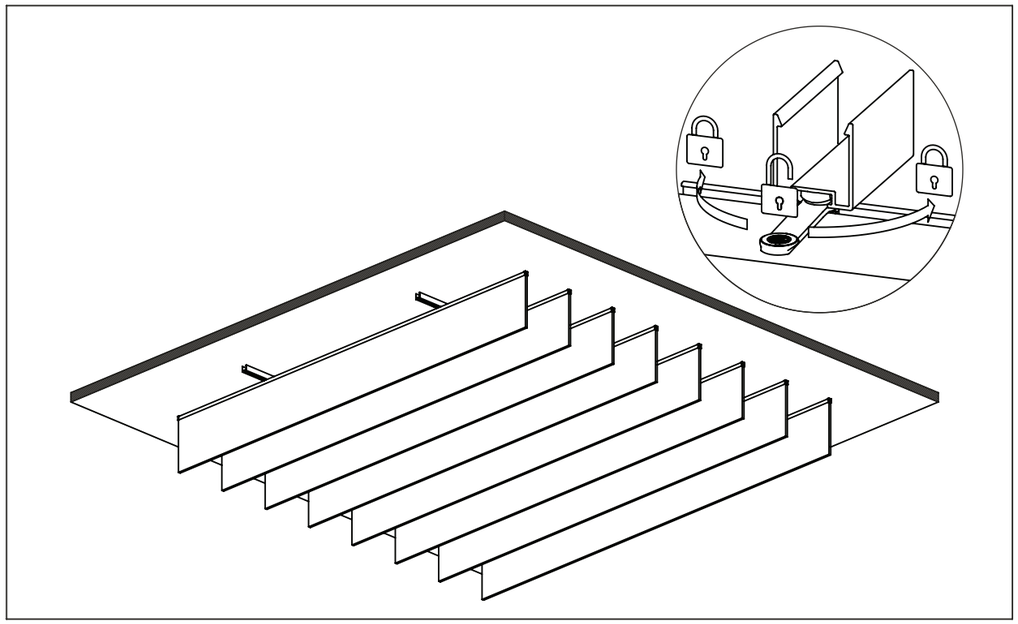

When you are satisfied with the alignment of the Fins/Rafts turn the clips 90° so they clip into the channel and lock in place.

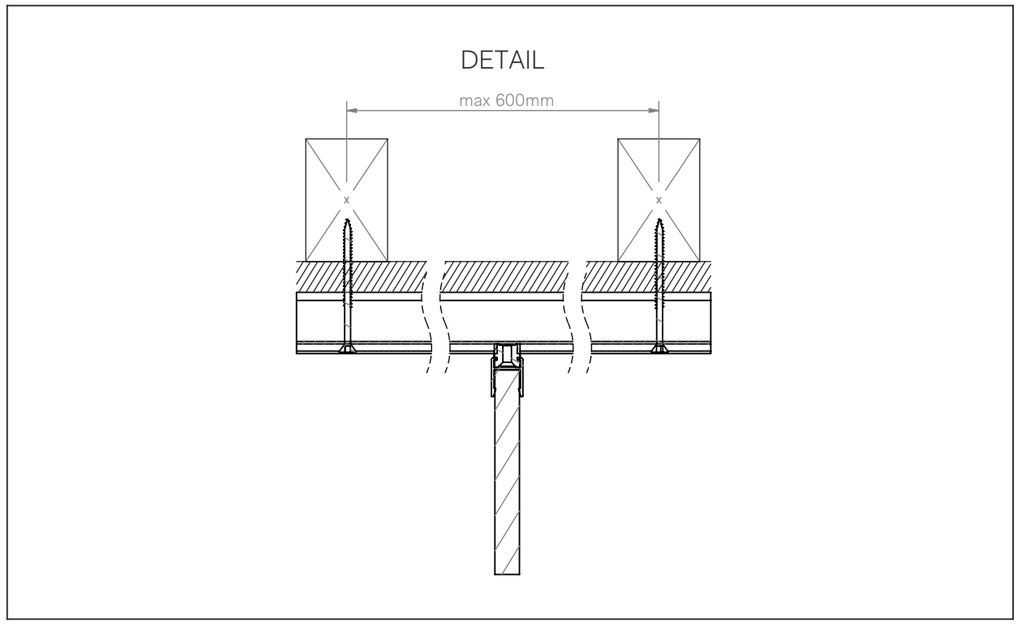

Ensure suitable fastener for the clip, rail and substrate is used. For additional security, the Autex Mounting Clips can be screwed into the cross rail.

1.

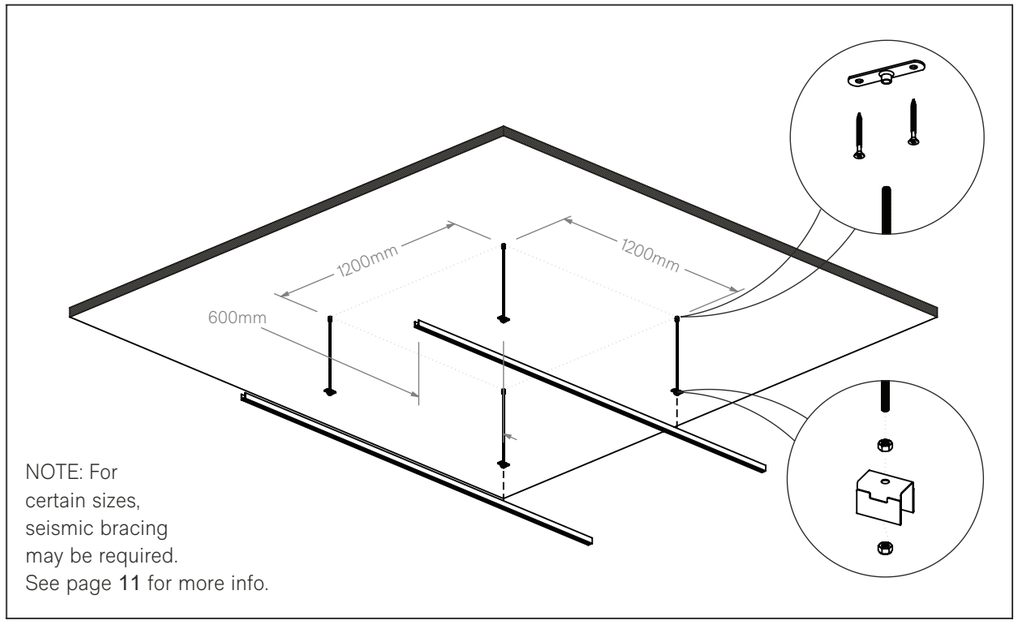

Mark out the ceiling and screw in 4x backing plates suitable for M6 threaded rod in a 1200mm x 1200mm square using screws suitable for the substrate (not supplied). Fin spacing can be marked on the cross rails prior to being clipped onto the Removable W-Clips. (Refer to table on page 29 for details).

2.

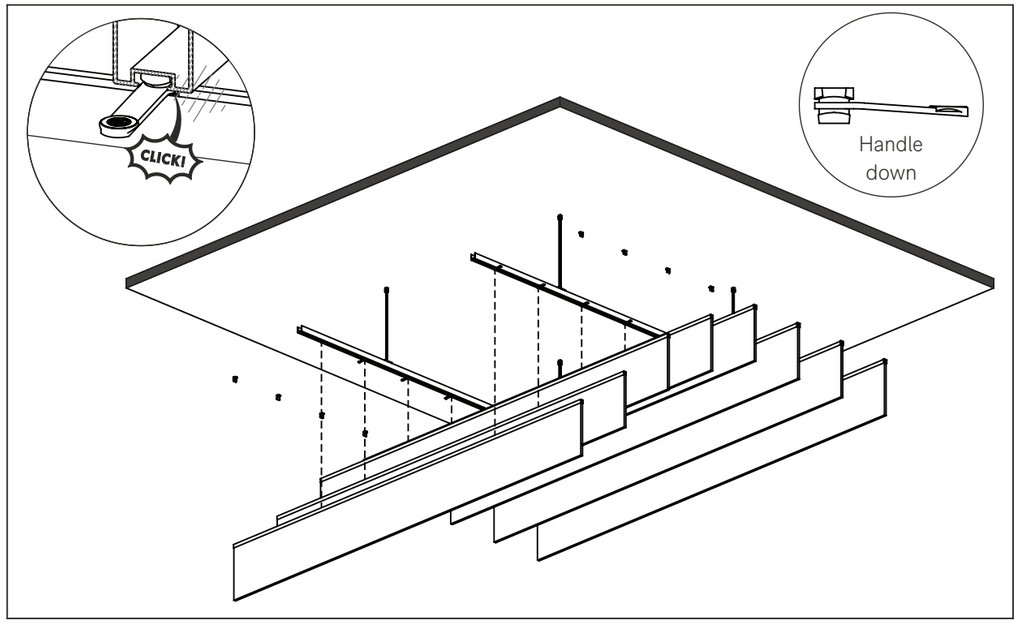

Insert the Autex Mounting Clips at the desired fin spacing on the cross rails with the handle tilted towards the floor. Lift the assembled Fins/Rafts into place and click them onto the Autex Mounting Clips. Turn the clips 45° to temporarily hold the Fin/Raft in place while allowing adjustment along the length.

3.

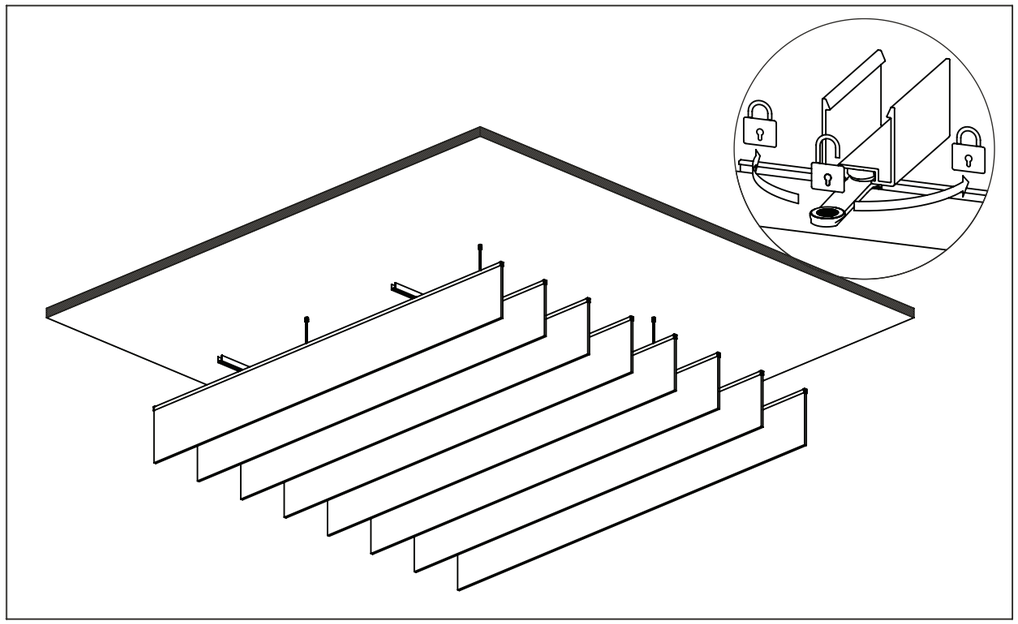

When you are satisfied with the alignment of the Fins/Rafts turn the clips 90º so they clip into the channel and lock in place.

NOTE: In sprinklered buildings please check with local fire engineer for sprinkler layouts and hanging requirements.

DETAIL

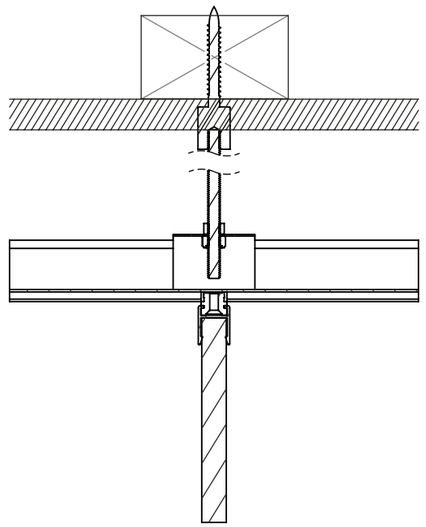

Ensure suitable fastener for the hanger and substrate is used.

PLEASE NOTE, the threaded rod and backing plate suspension method is the default option for large installations. As these parts are supplied by a third party, please see your account manager for preferred supplier in your territory. For smaller installations, adjustable cable hangers are available from Autex.

Suggested Ceiling Fixing Detail		
Substrate	Fixing	Minimum Embedment
Concrete	Hilti-HUS3-HR6	40mm
Steel	Stainless Steel 8G Tek Screw	0.55mm
Timber	Stainless Steel 8G Wood Screw	30mm

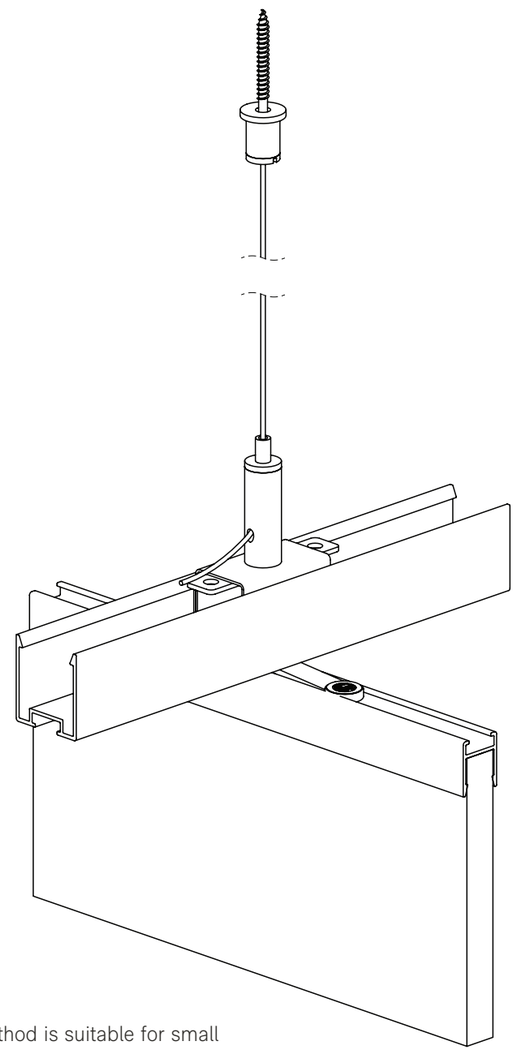

NOTE: This suspension method is suitable for small installations only.
For larger installations refer to pages 7-11.

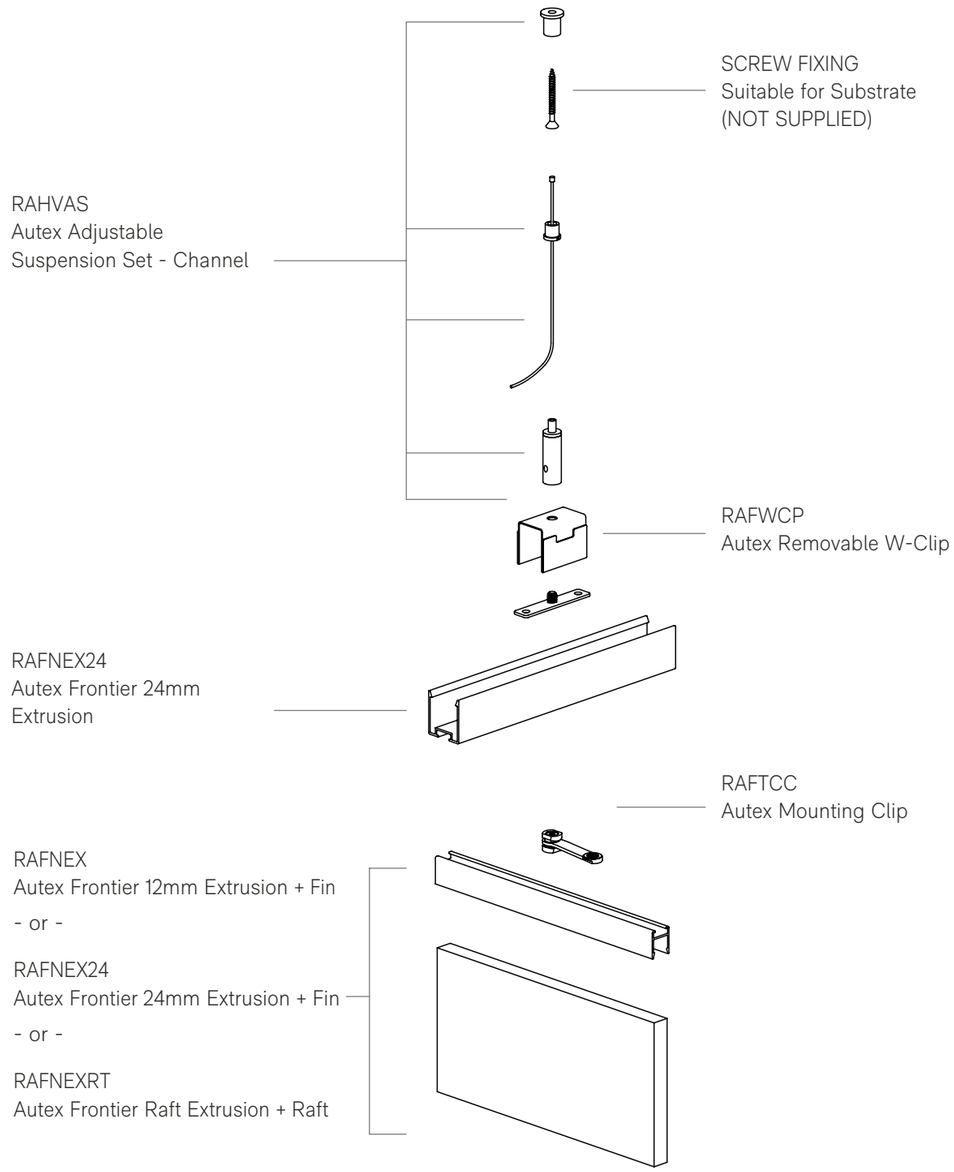

Suggested Ceiling Fixing Detail		
Substrate	Fixing	Minimum Embedment
Concrete	Hilti-HUS3-HR6	40mm
Steel	Stainless Steel 8G Tek Screw	0.55mm
Timber	Stainless Steel 8G Wood Screw	30mm

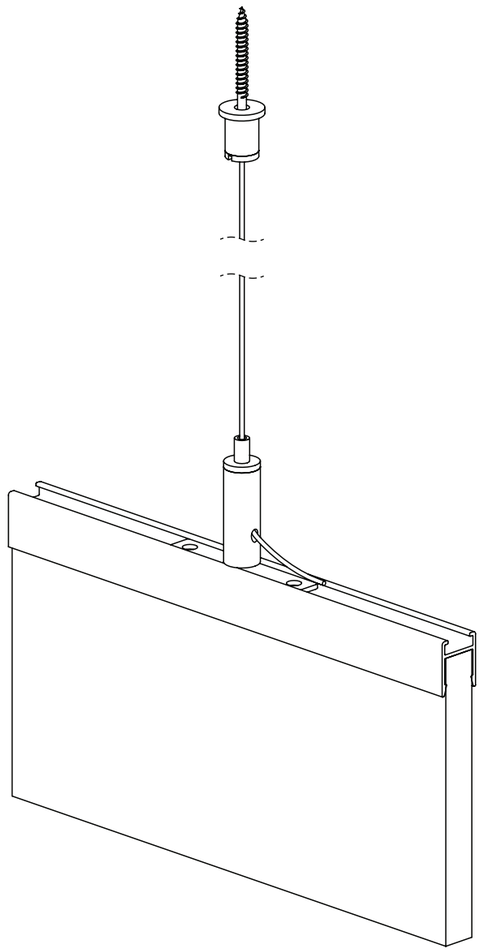

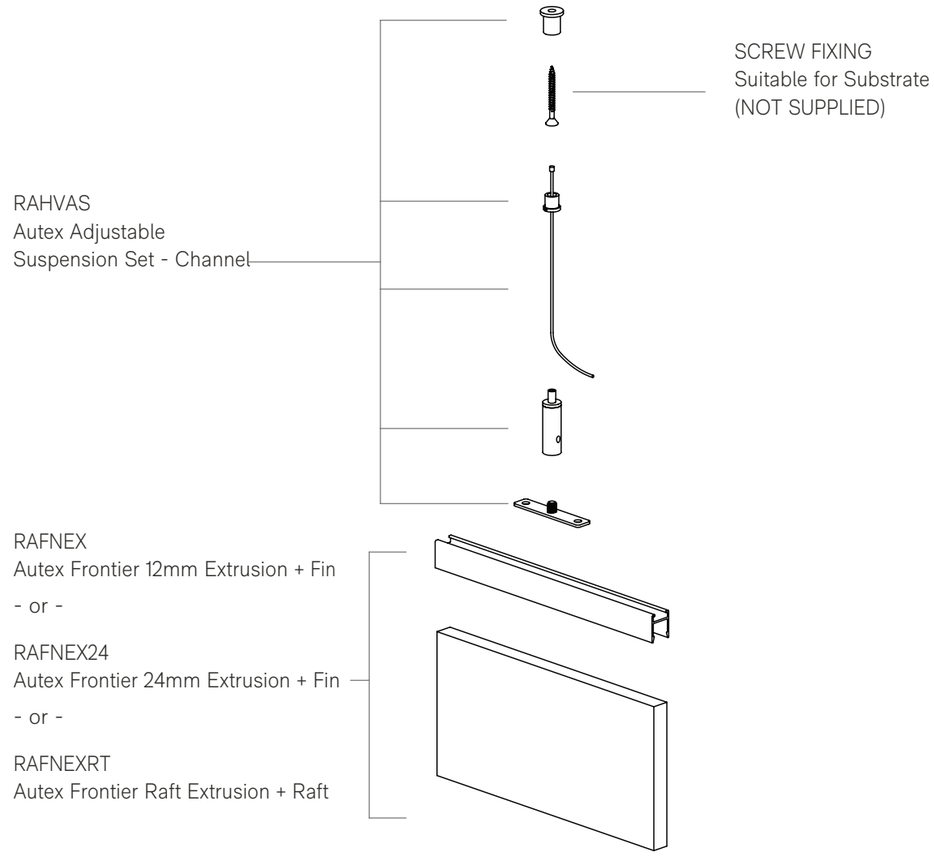

NOTE: This suspension method is
suitable for individual fins only.
Requires 1x RAHVAS set per fin.
For larger installations refer to pages 7-11.

Suggested Ceiling Fixing Detail		
Substrate	Fixing	Minimum Embedment
Concrete	Hilti-HUS3-HR6	40mm
Steel	Stainless Steel 8G Tek Screw	0.55mm
Timber	Stainless Steel 8G Wood Screw	30mm

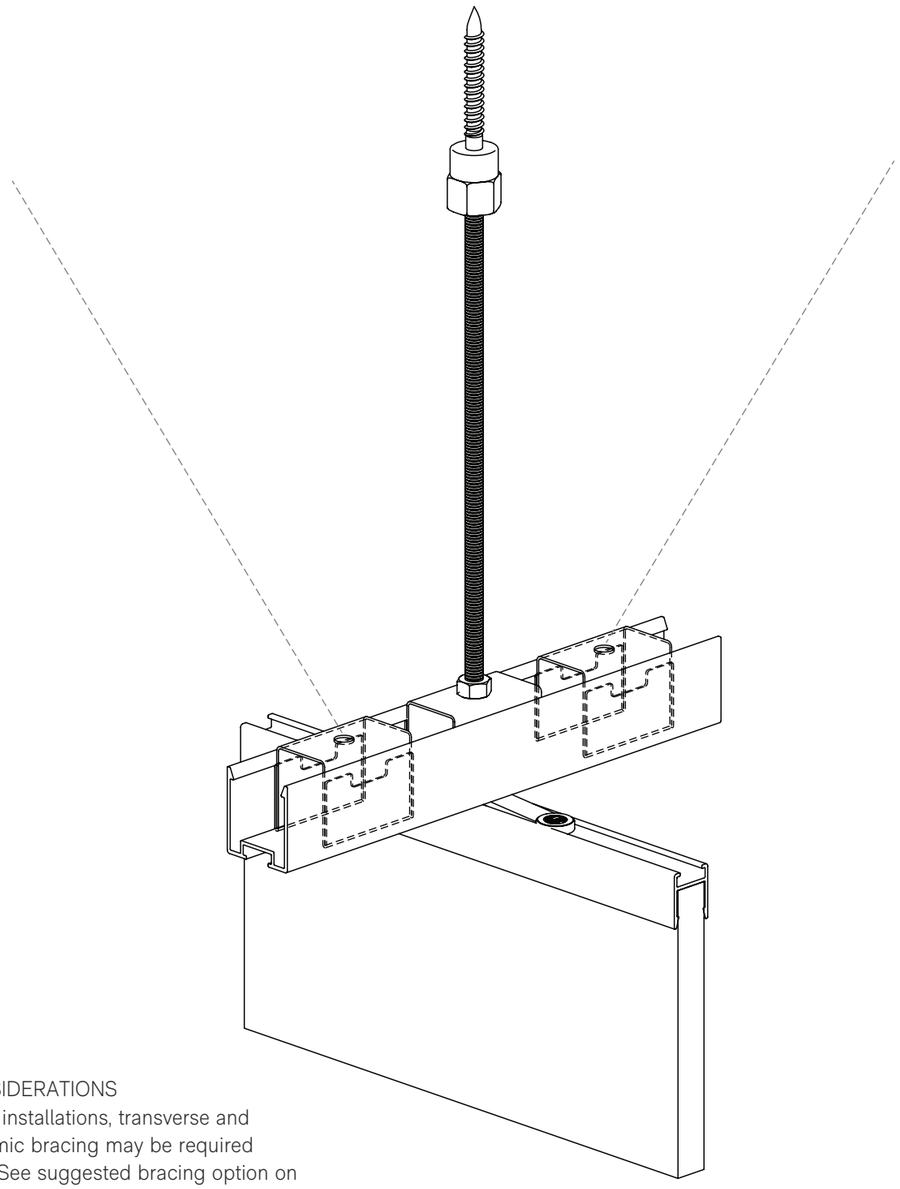

SEISMIC CONSIDERATIONS
For certain size installations, transverse and longitudal seismic bracing may be required (dashed lines). See suggested bracing option on page 11.

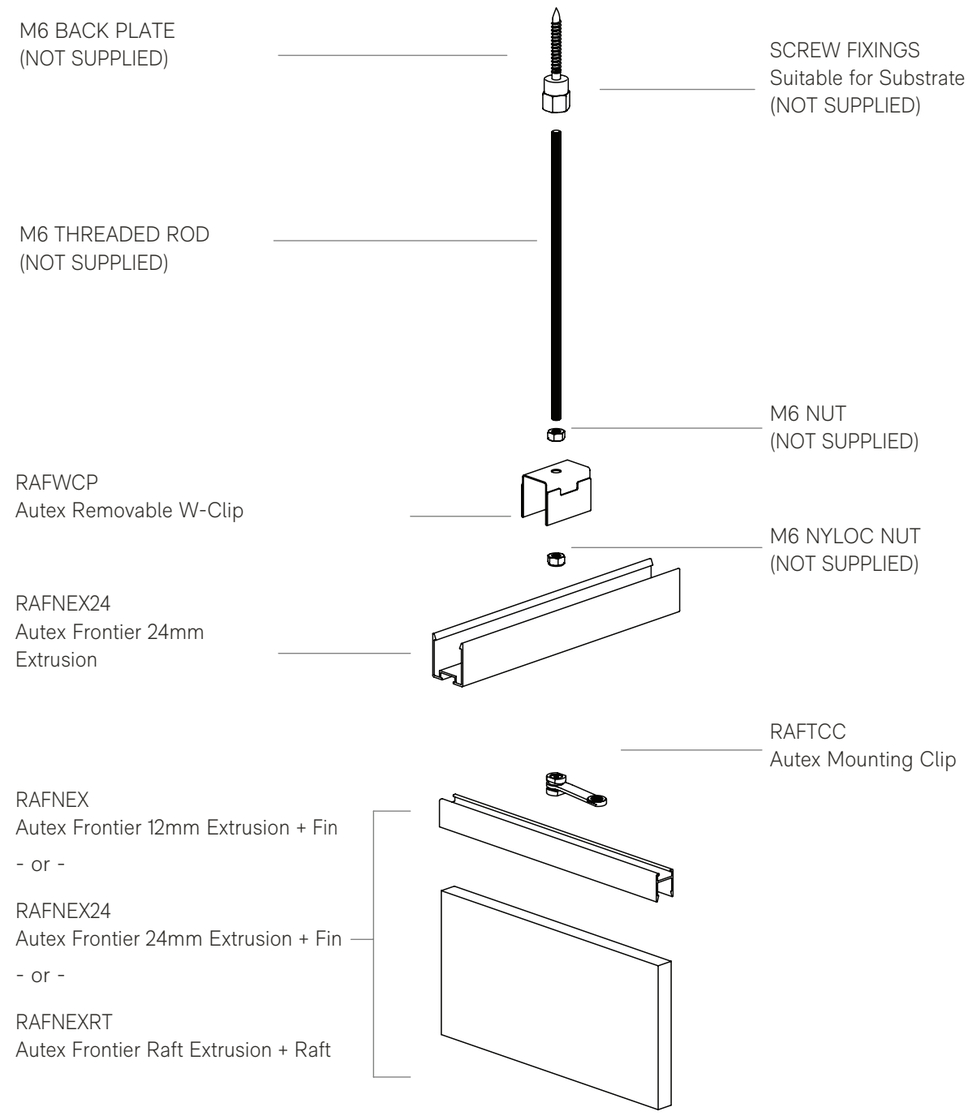

Suggested Ceiling Fixing Detail		
Substrate	Fixing	Minimum Embedment
Concrete	Hilti-HUS3-HR6	40mm
Steel	Stainless Steel 8G Tek Screw	0.55mm
Timber	Stainless Steel 8G Wood Screw	30mm

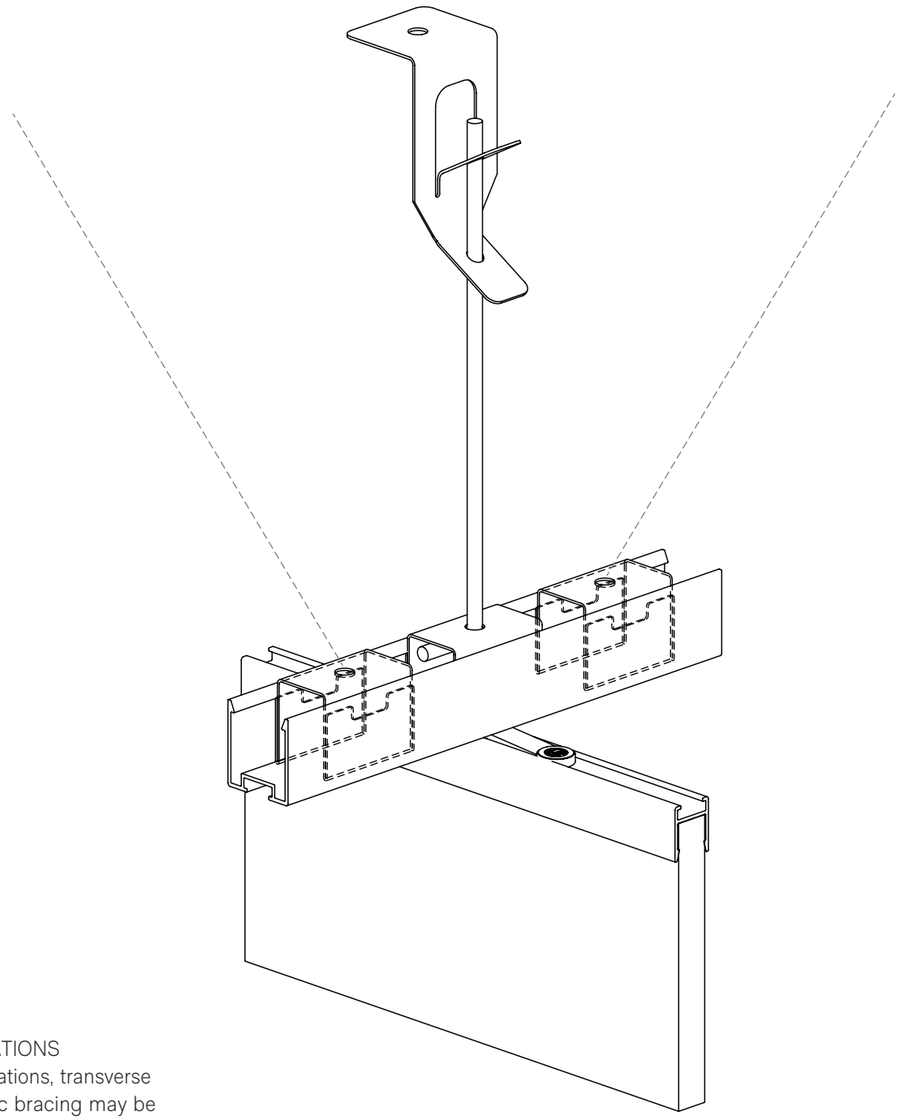

SEISMIC CONSIDERATIONS
For certain size installations, transverse and longitudal seismic bracing may be required (dashed lines). See suggested bracing option on page 11.

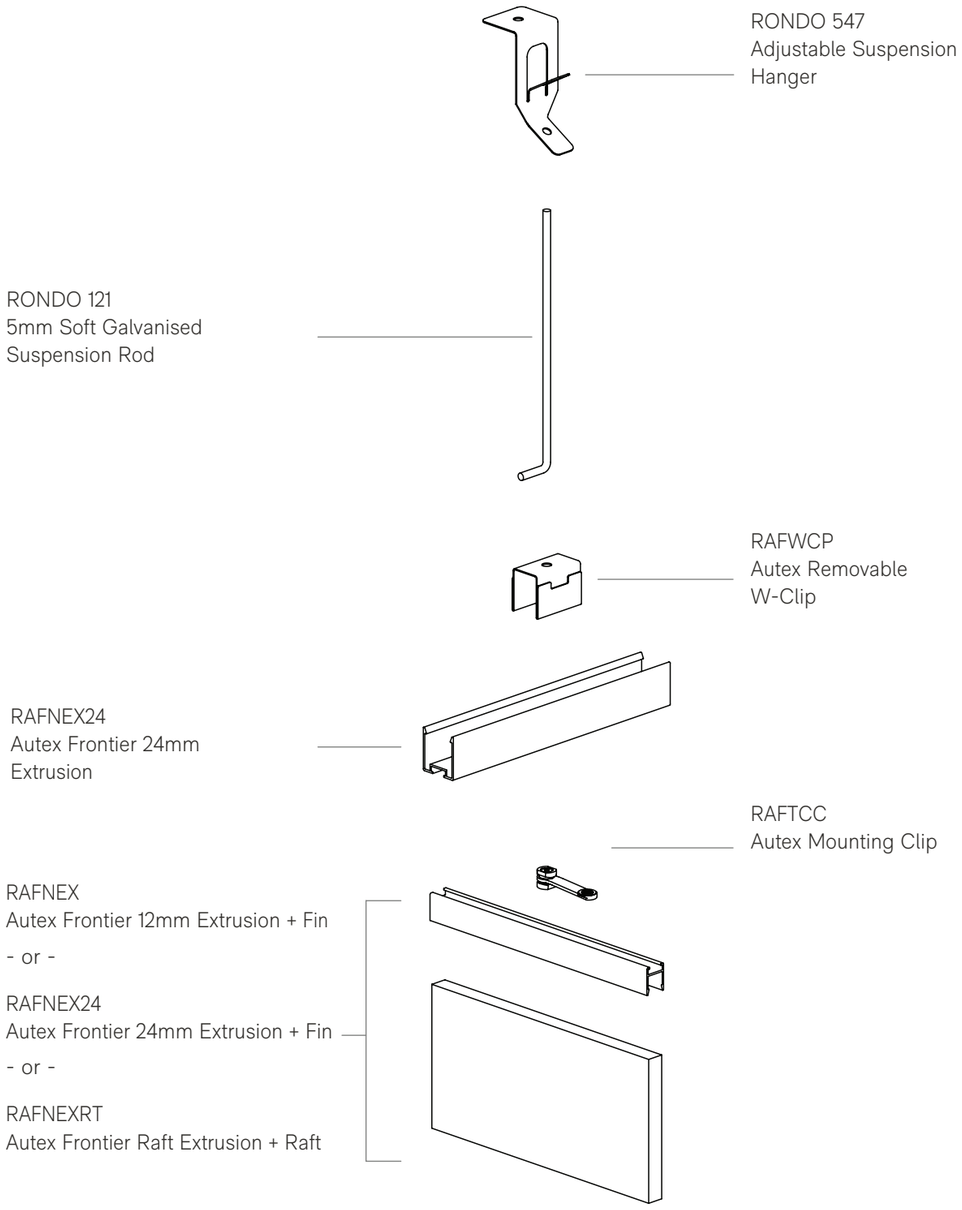

Suggested Ceiling Fixing Detail		
Substrate	Fixing	Minimum Embedment
Concrete	Hilti-HUS3-HR6	40mm
Steel	Stainless Steel 8G Tek Screw	0.55mm
Timber	Stainless Steel 8G Wood Screw	30mm

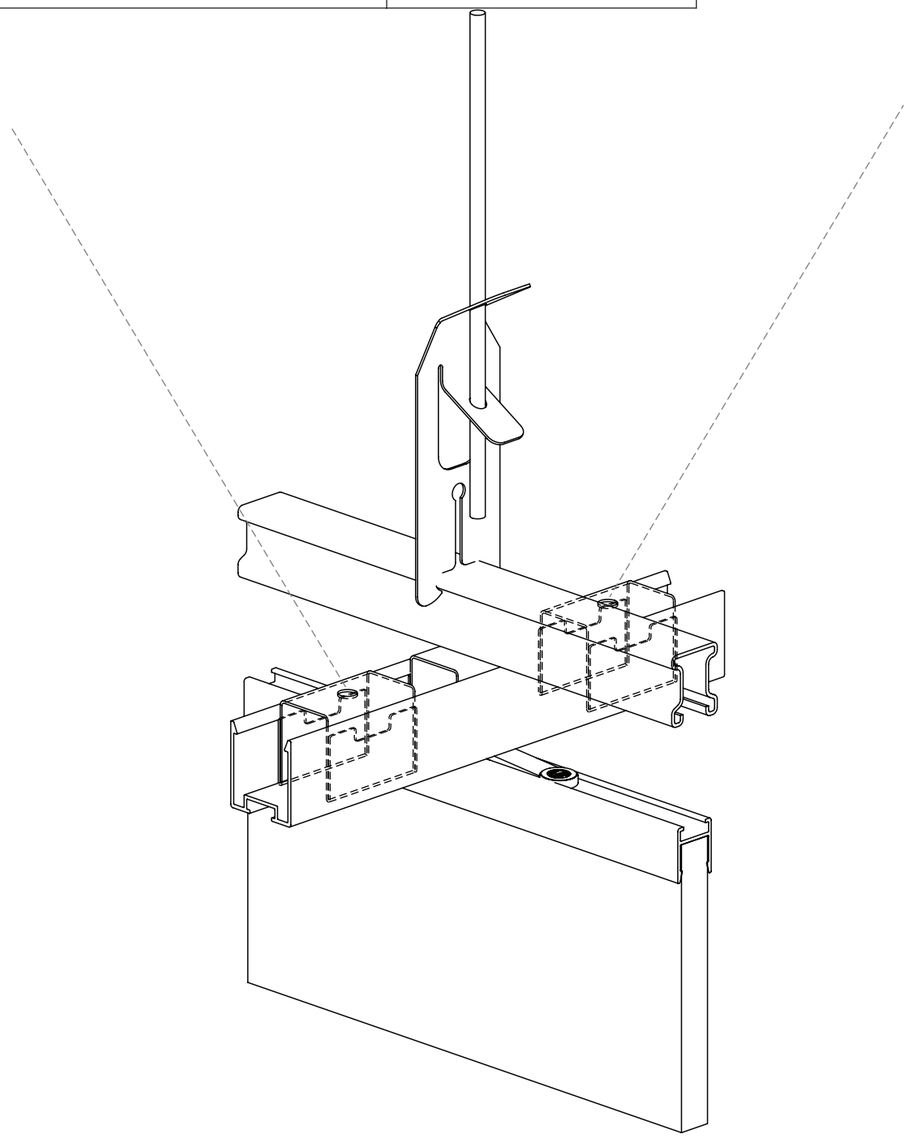

SEISMIC CONSIDERATIONS
For certain size installations, transverse and longitudal seismic bracing may be required (dashed lines). See suggested bracing option on page 11.

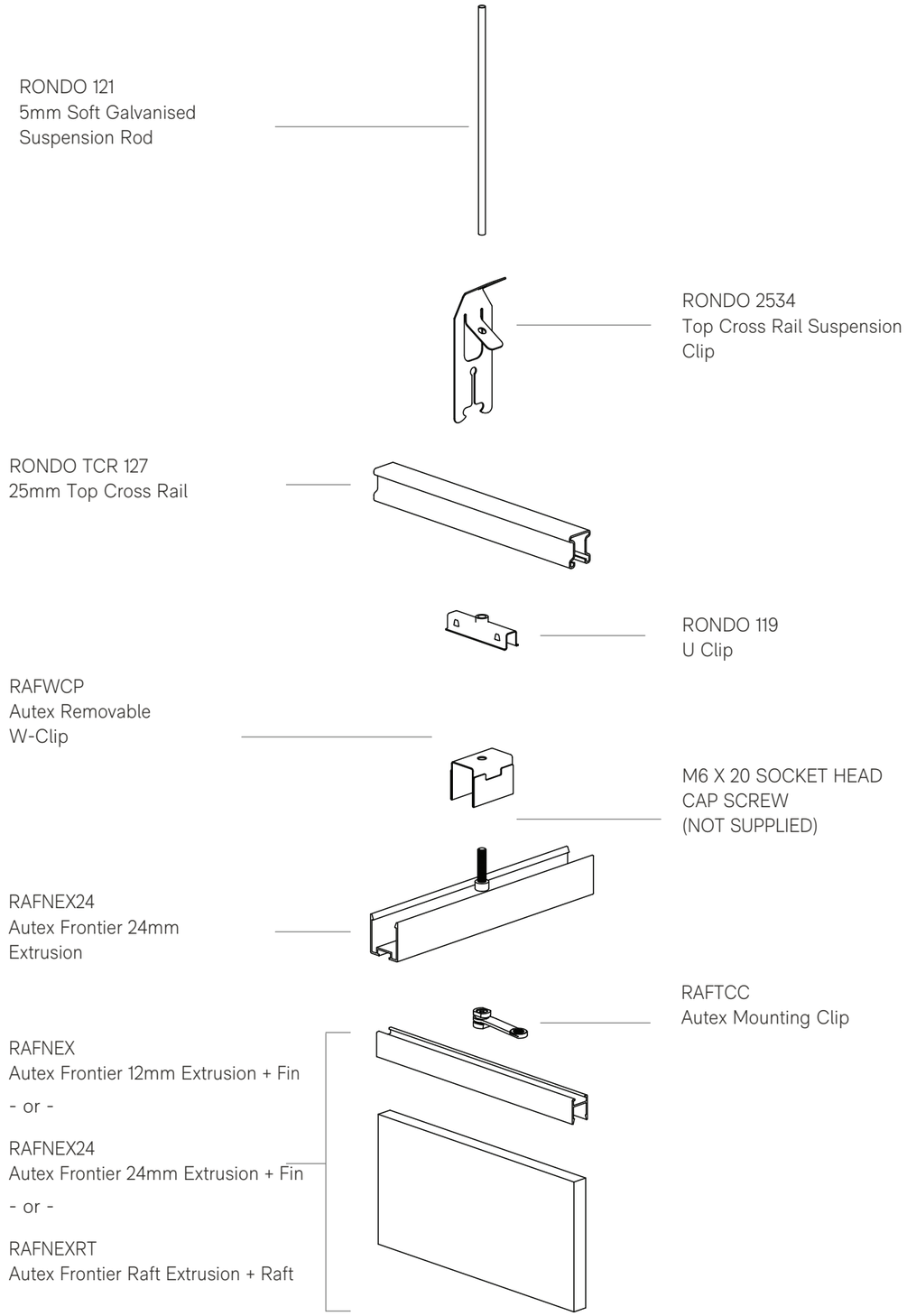

Suggested Ceiling Fixing Detail		
Substrate	Fixing	Minimum Embedment
Concrete	Hilti-HUS3-HR6	40mm
Steel	Stainless Steel 8G Tek Screw	0.55mm
Timber	Stainless Steel 8G Wood Screw	30mm

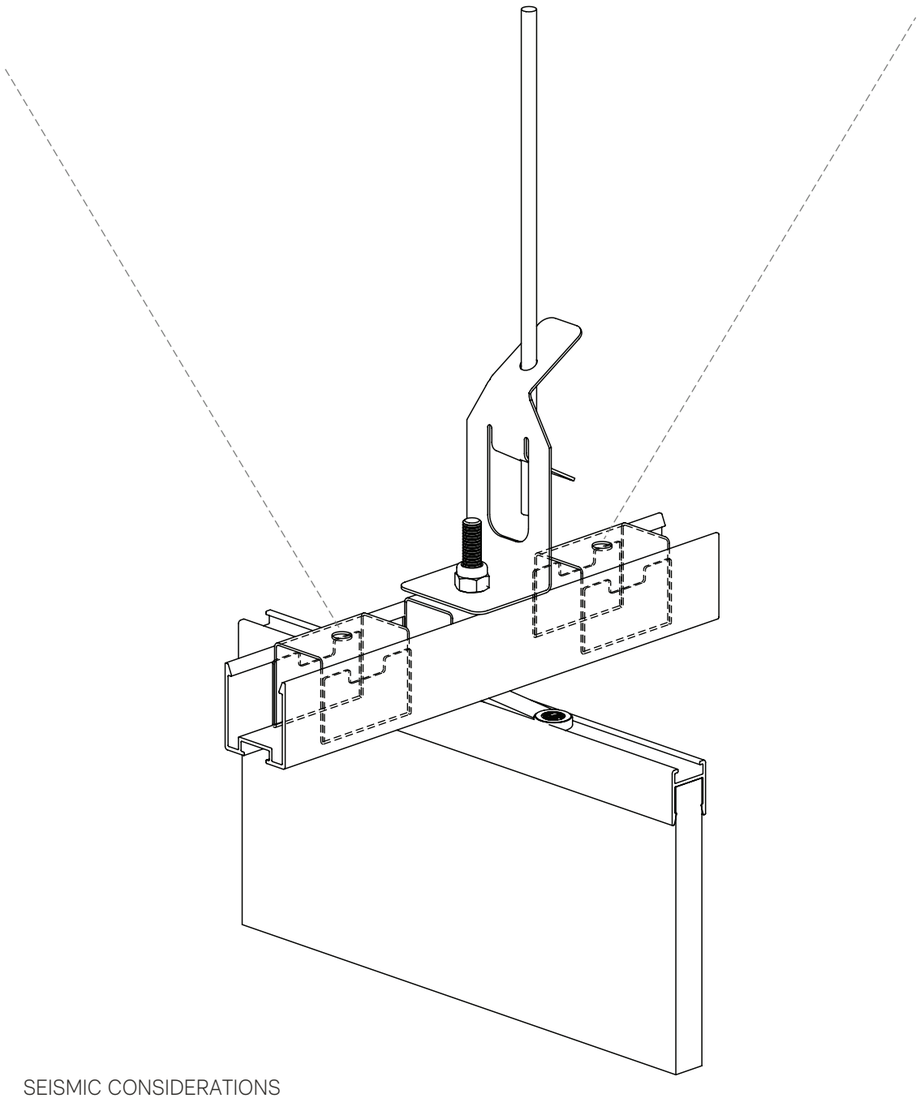

SEISMIC CONSIDERATIONS
For certain size installations, transverse and longitudal seismic bracing may be required (dashed lines). See suggested bracing option on page 11.

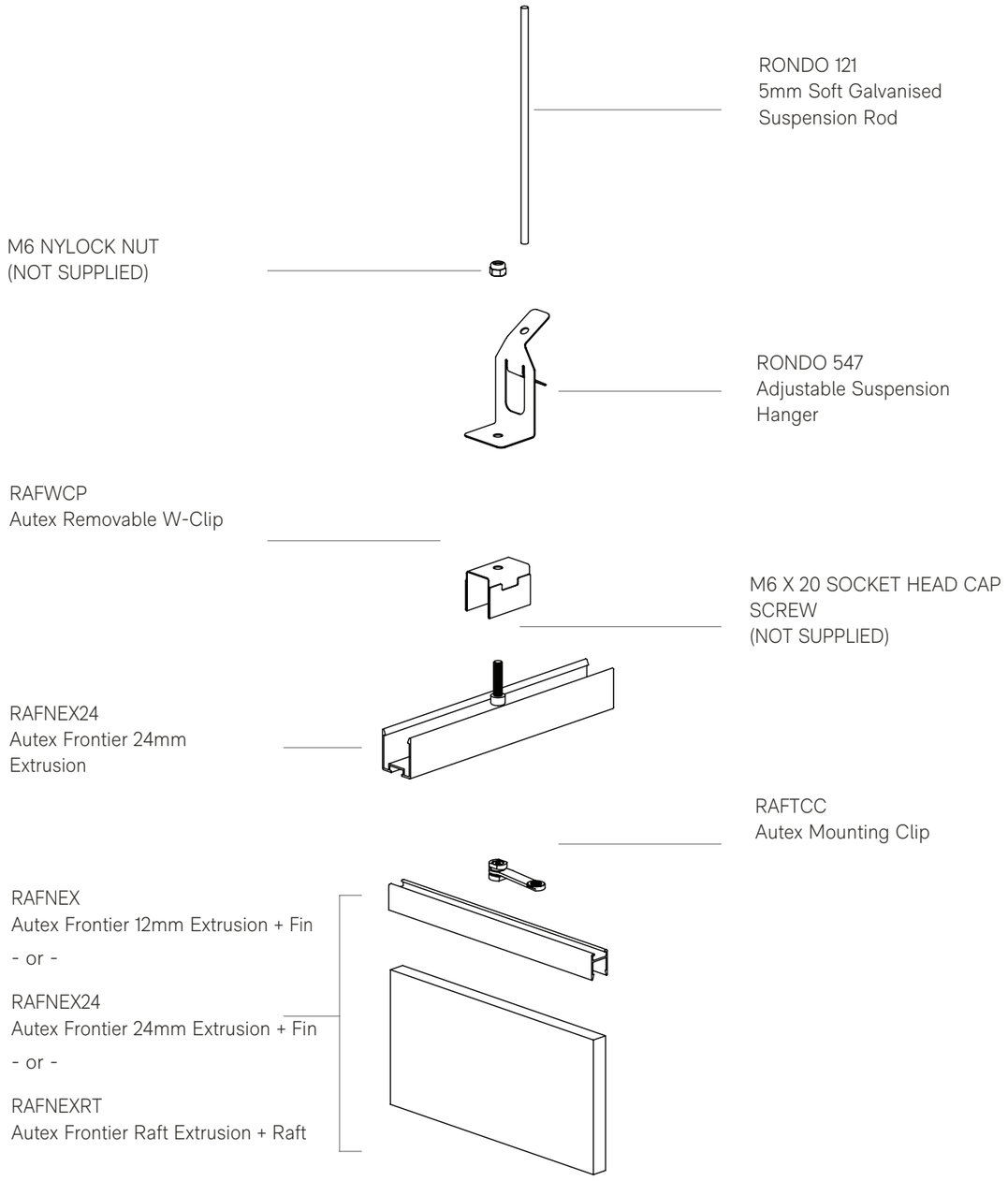

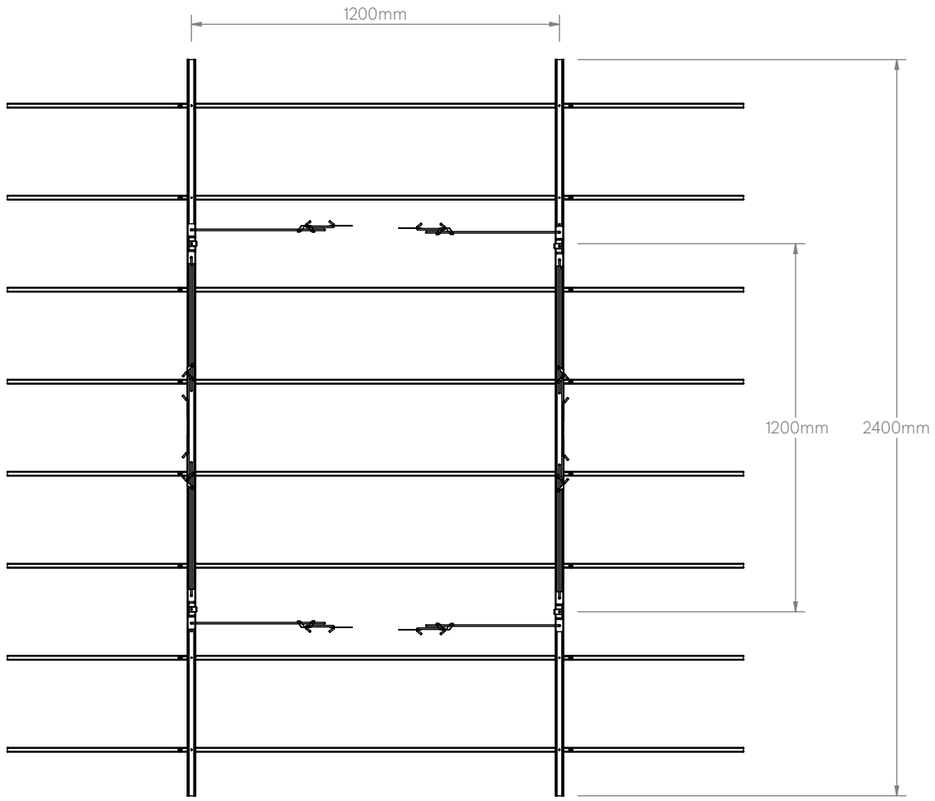

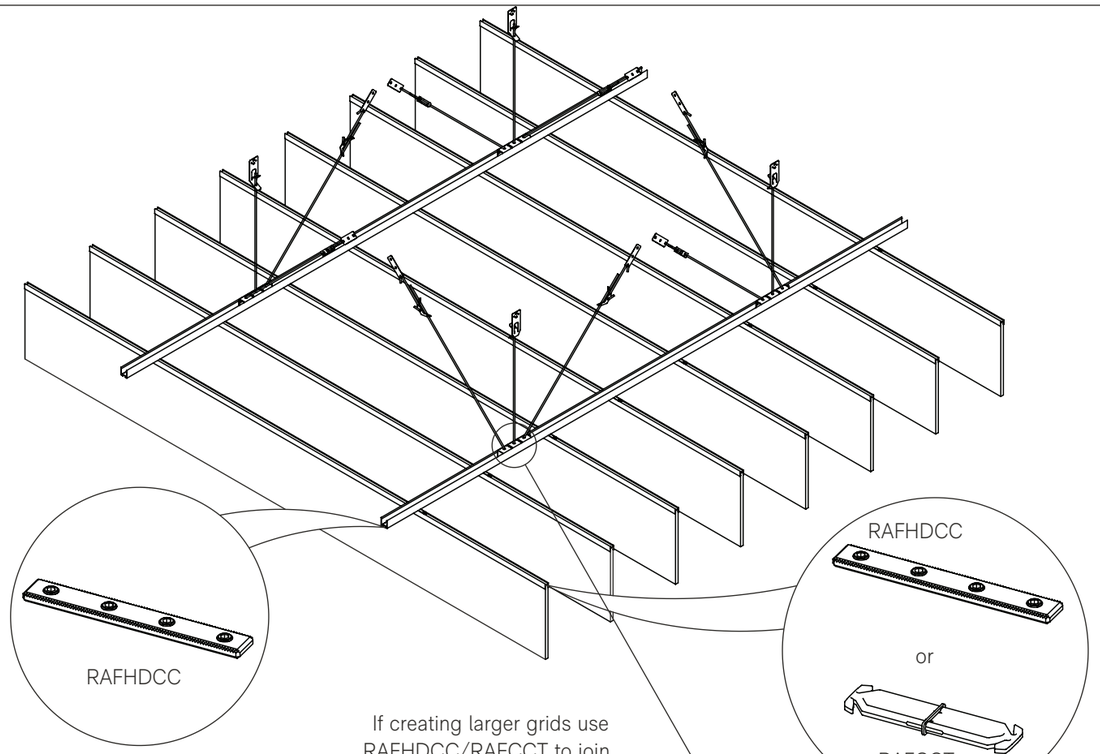

If creating larger grids use RAFHDCC/RAFCCT to join rails/cross rails

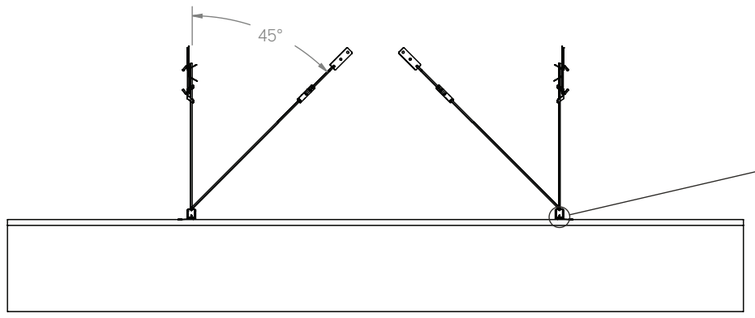

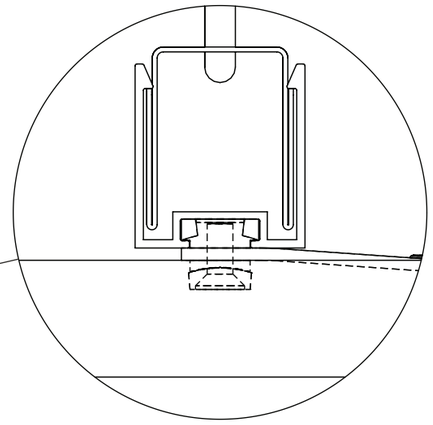

RAFWCP
Autex Removable W-Clip

RAFNEX24 (used as crossrail)
Autex Frontier 24mm Extrusion

RAFTCC
Autex Mounting Clip

RAFNEX
Autex Frontier 12mm Extrusion + Fin

- or -

RAFNEX24
Autex Frontier 24mm Extrusion + Fin

- or -

RAFNEXRT
Autex Frontier Raft Extrusion + Raft

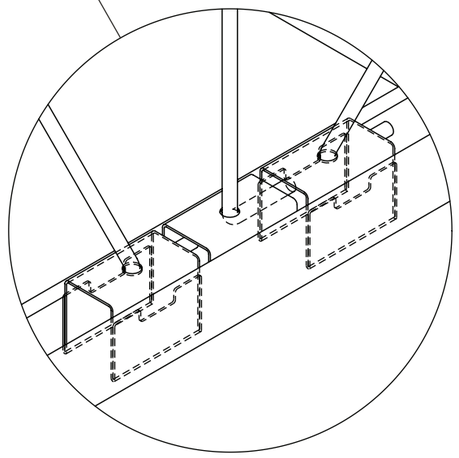

Additional Autex W Clips act as interface between bracing and channel

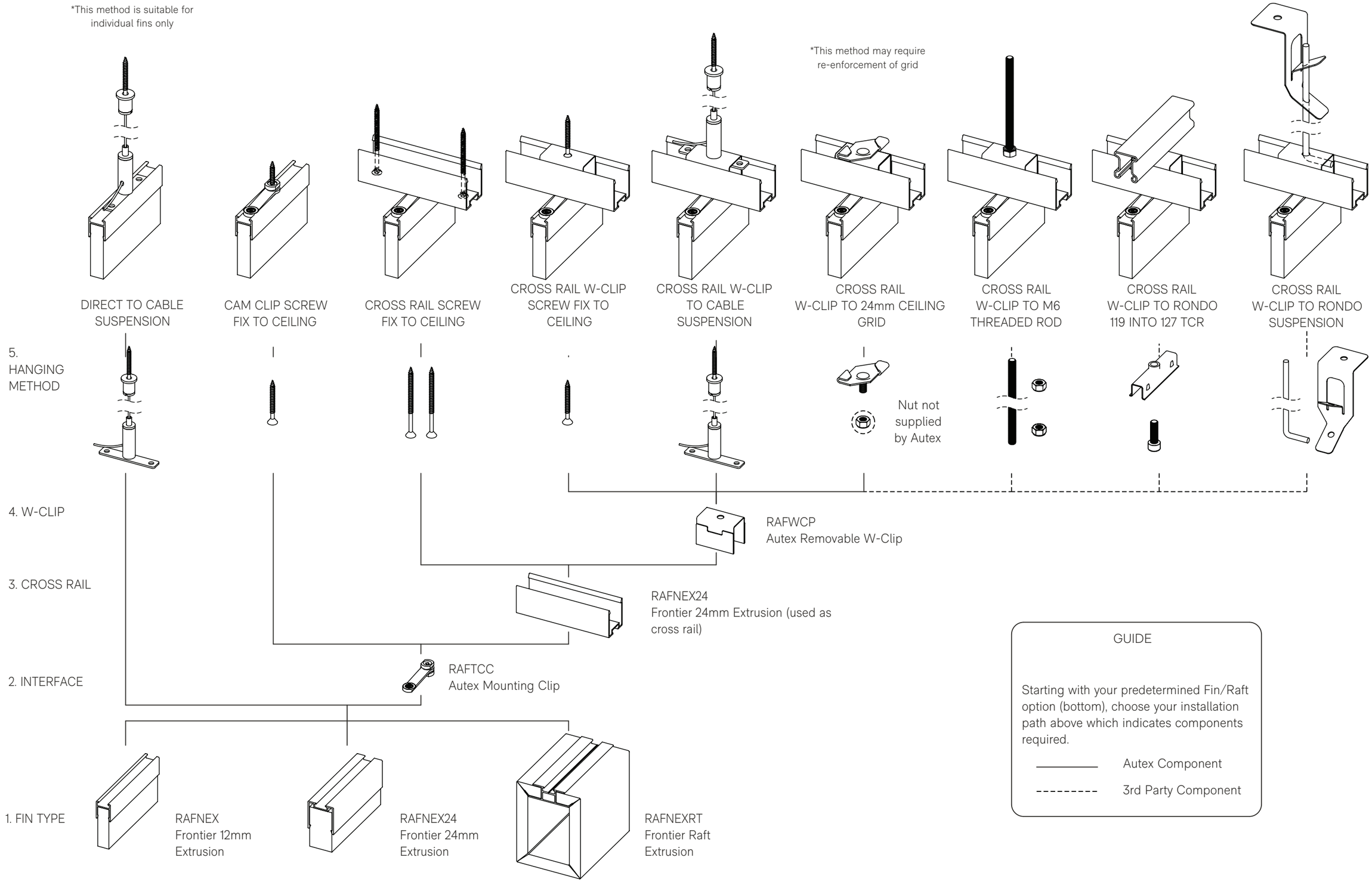
*This method is suitable for individual fins only
*This method may require re-enforcement of grid
DIRECT TO CABLE SUSPENSION
CAM CLIP SCREW FIX TO CEILING
CROSS RAIL SCREW FIX TO CEILING
CROSS RAIL W-CLIP SCREW FIX TO CEILING
CROSS RAIL W-CLIP TO CABLE SUSPENSION
CROSS RAIL W-CLIP TO 24mm CEILING GRID
CROSS RAIL W-CLIP TO M6 THREADED ROD
CROSS RAIL W-CLIP TO RONDO 119 INTO 127 TCR
CROSS RAIL W-CLIP TO RONDO SUSPENSION
5. HANGING METHOD
Nut not supplied by Autex
4. W-CLIP
RAFWCP
Autex Removable W-Clip
3. CROSS RAIL
RAFNEX24
Frontier 24mm Extrusion (used as cross rail)
2. INTERFACE
RAFTCC
Autex Mounting Clip
1. FIN TYPE
RAFNEX
Frontier 12mm Extrusion
RAFNEX24
Frontier 24mm Extrusion
RAFNEXRT
Frontier Raft Extrusion
GUIDE
Starting with your predetermined Fin/Raft option (bottom), choose your installation path above which indicates components required.
Autex Component
3rd Party Component

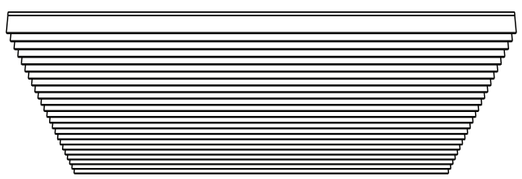

TUNDRA 100

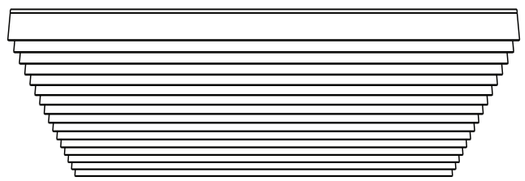

TUNDRA 150

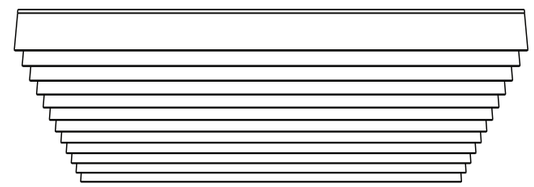

TUNDRA 200

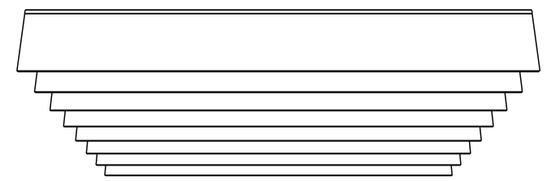

TUNDRA 300

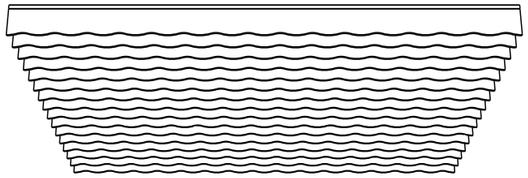

WAVE

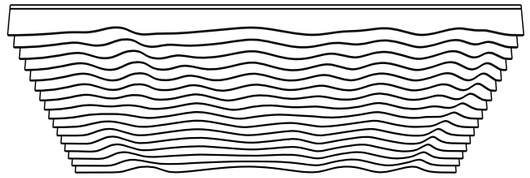

DRAPE

GLIDE

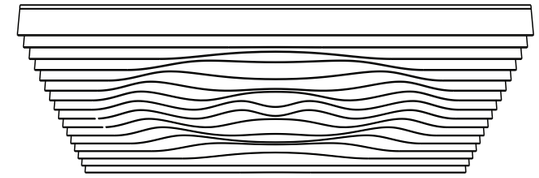

RIPPLE

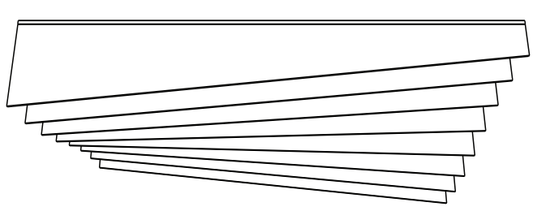

SIERRA

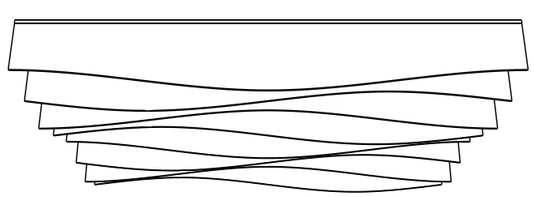

TALUS

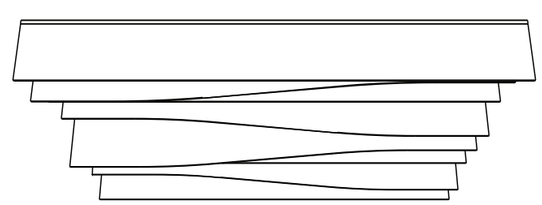

DUNE

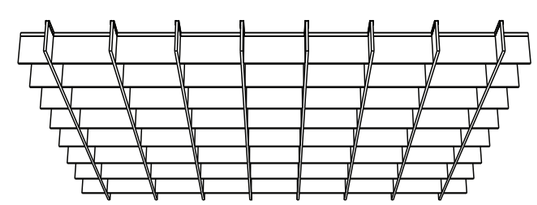

AXIS

Certain styles of Frontier fins (noted below) use a notch detail to signify correct sequence and orientation prior to install.
This detail is located in the top edge of the fin, and is covered by the RAFNEX channel when installed.

If you are using a style noted below, check how these notches should be sequenced for correct install order.

DRAPE

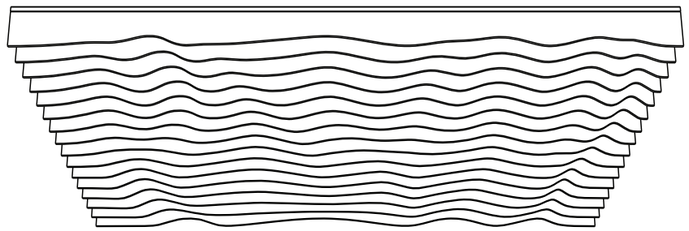

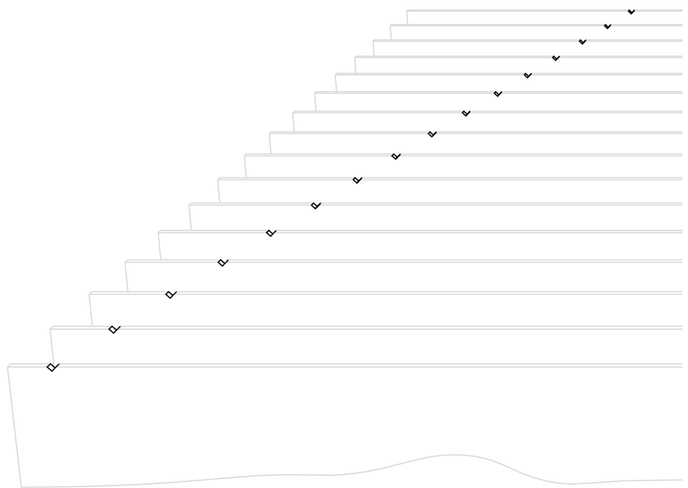

Drape fins are all unique, so the sequence continues throughout the pack.

GLIDE

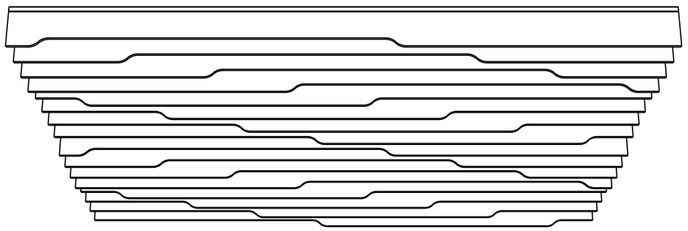

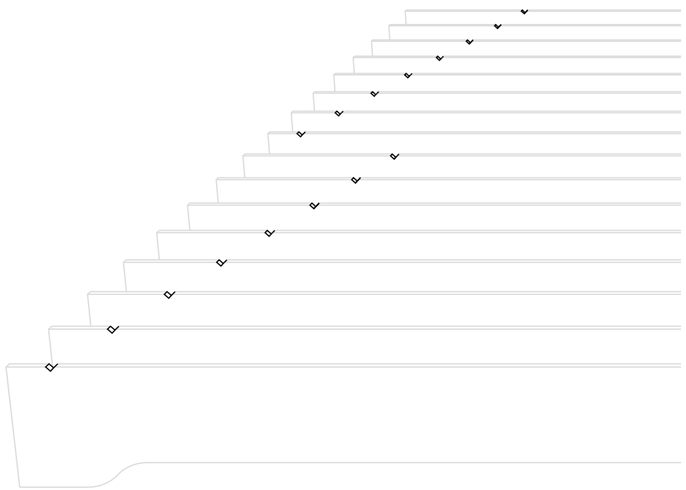

The Glide pattern repeats once within a pack, so the notches should stagger as shown.

This pattern looks continuous from beneath when installed correctly.

RIPPLE

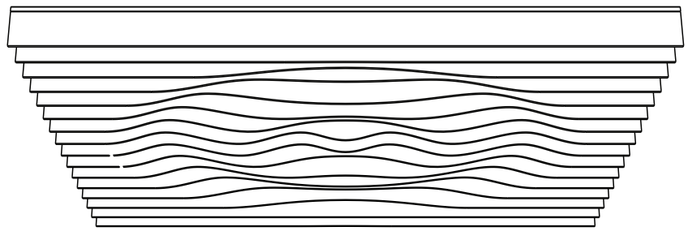

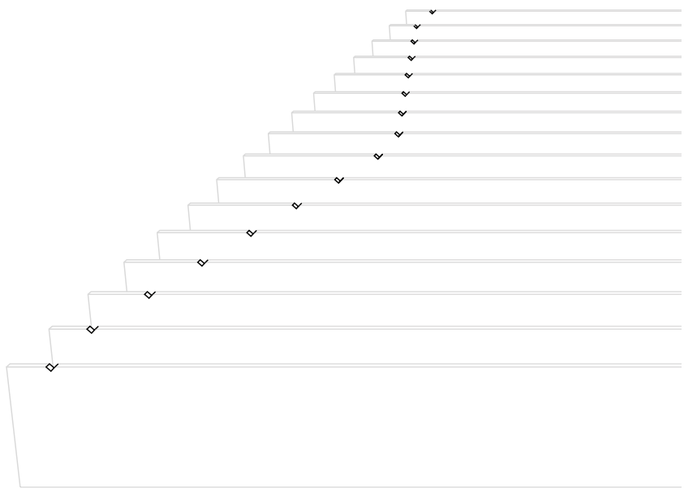

Ripple has a symmetrical pattern, so the notches should reverse direction at half-way like shown.

WAVE

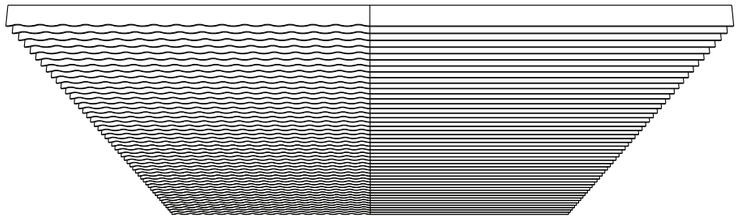

DRAPE

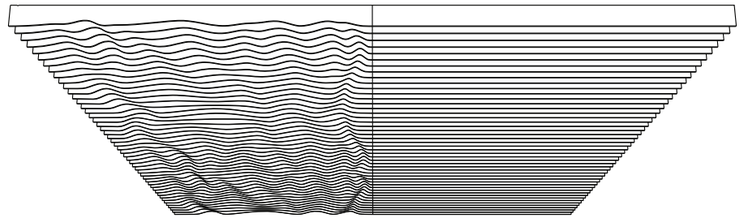

GLIDE

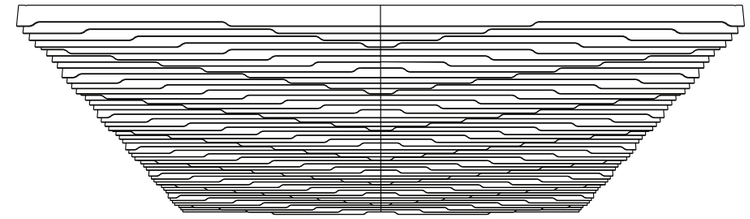

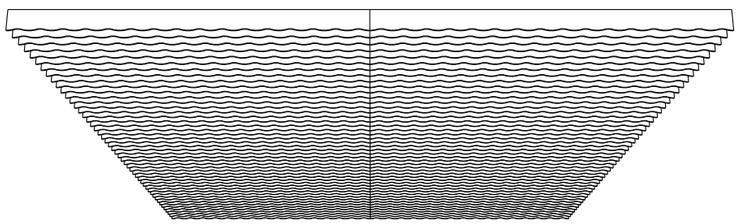

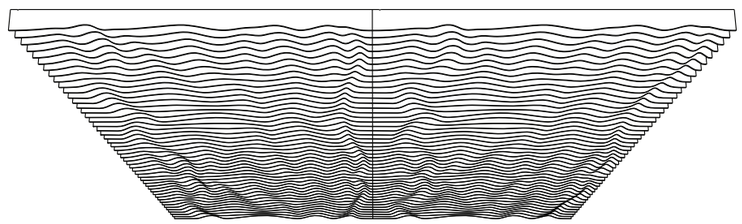

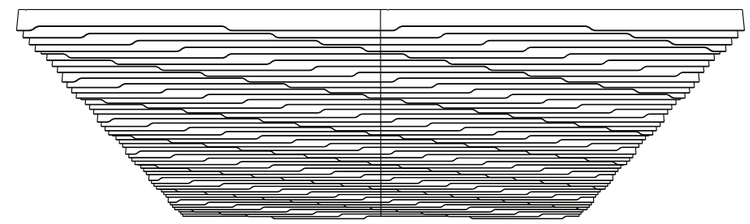

Tip: For a more irregular pattern, fin sequence can be mirrored between packs. Fins should stay the same orientation end-to-end though.

RIPPLE

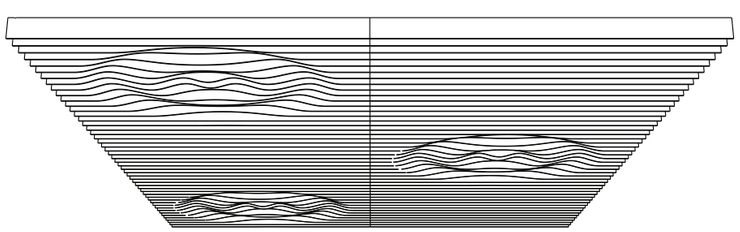

Note:
6x packs are shown arrayed in each example (2 wide x 3 long).
All styles are designed to pair with Tundra 150 if desired.

DUNE

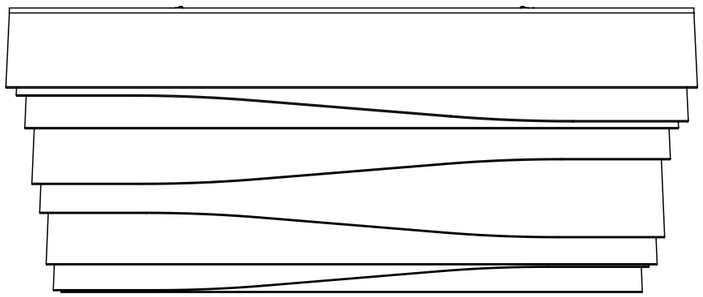

Install sequence pattern as shown above
A, C, D, C*, B, E, B*, A

Box layout as shown below.

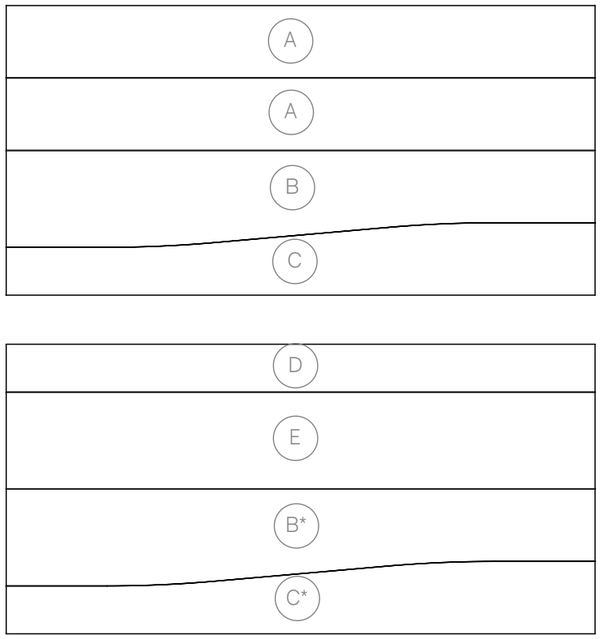

SIERRA

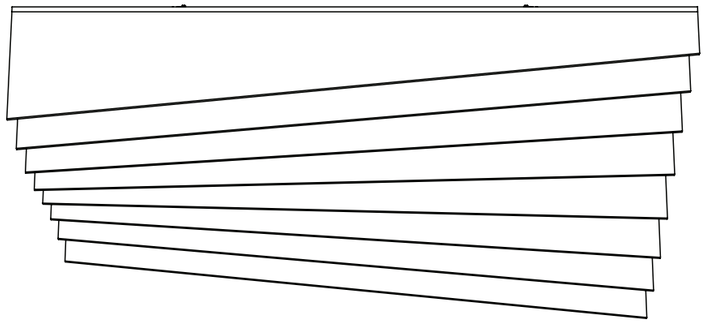

Installation sequence pattern as shown above
D, C, B, A, A*, B*, C*, D*...
To continue the pattern, the following set of 8 fins will be in the REVERSE order

Box layout as shown below.

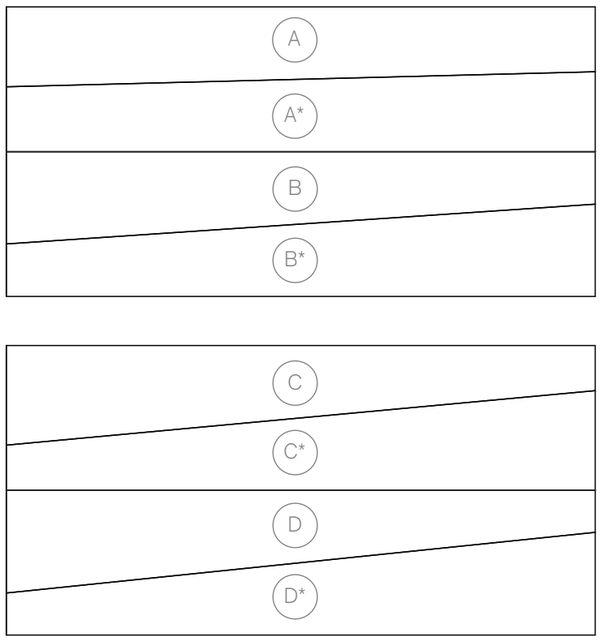

TALUS

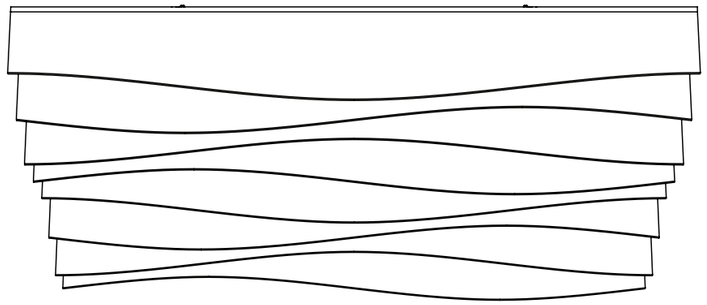

Installation sequence pattern as shown above
A, C, B, C*, A, C, B, C*...

Box layout as shown below.

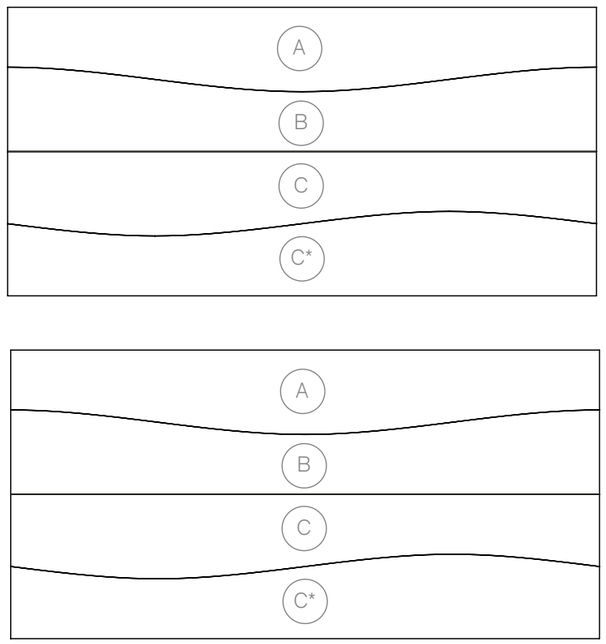

DUNE

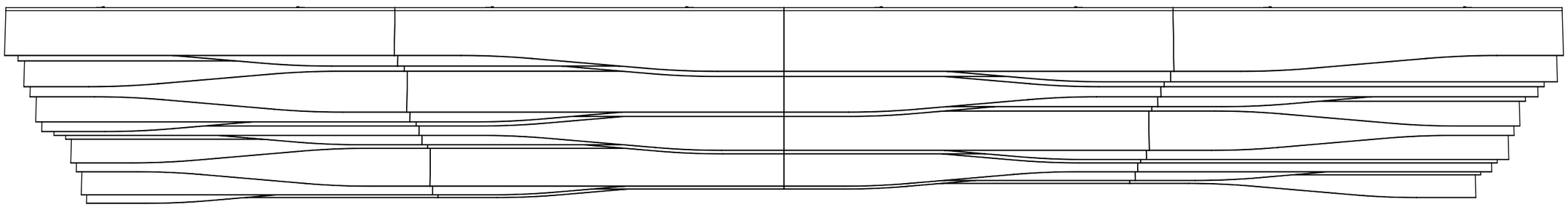

SIERRA

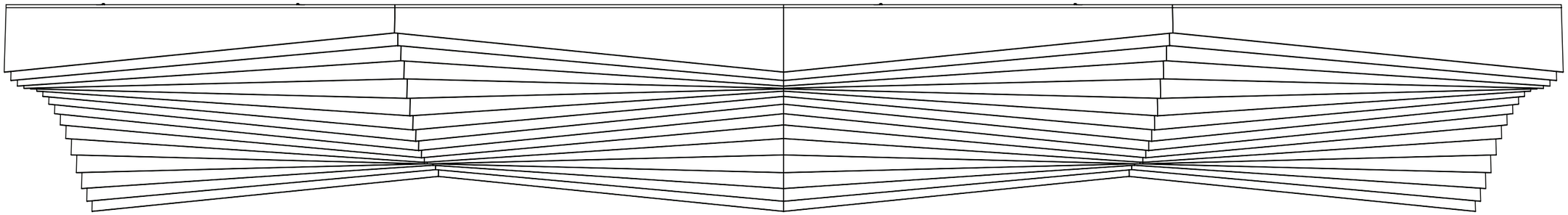

TALUS

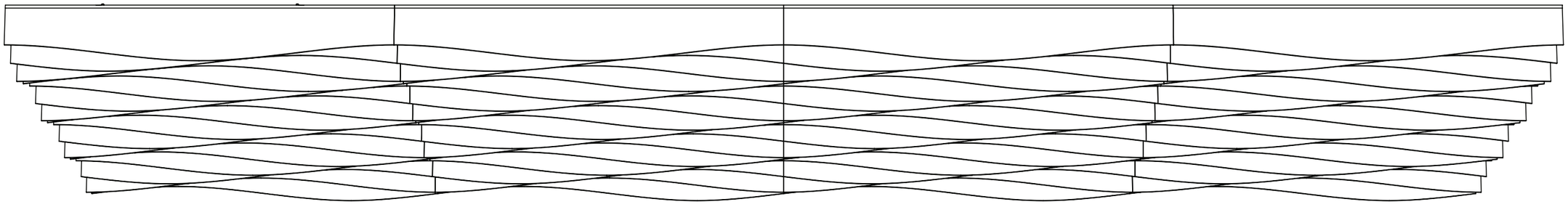

NOTES

- Recommended guide for listed ceiling coverage is for the fin spacing to be equal to the fin height.

FIN SPACING = FIN HEIGHT

- Fin height is inclusive of the Autex Frontier Extrusion

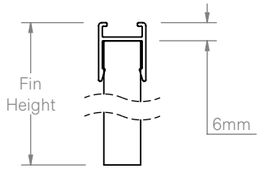

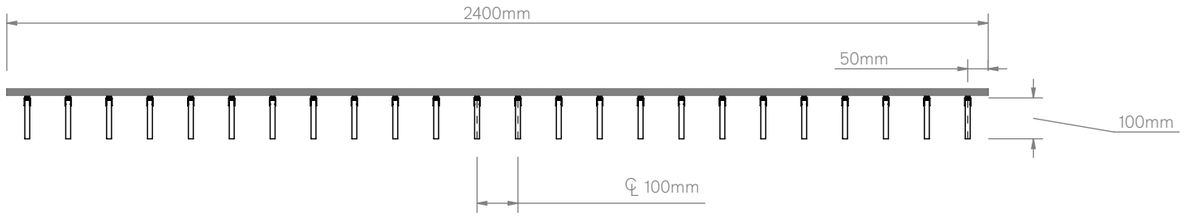

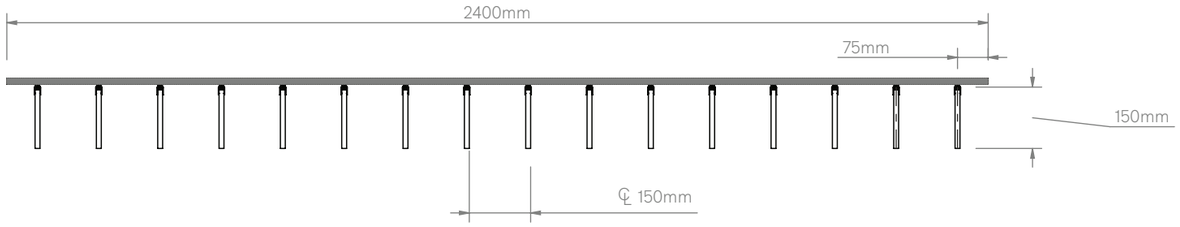

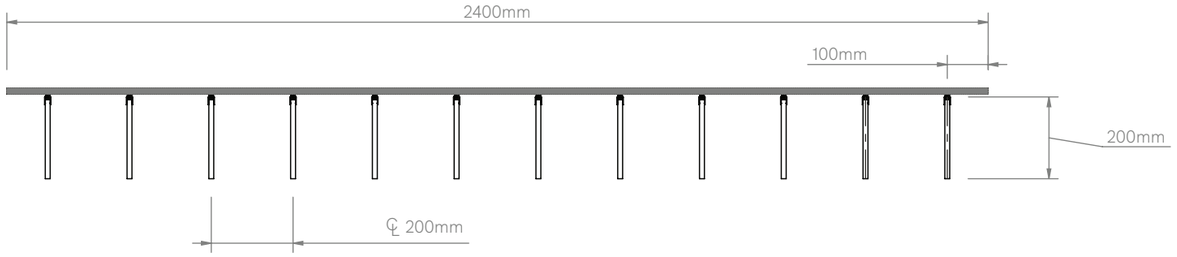

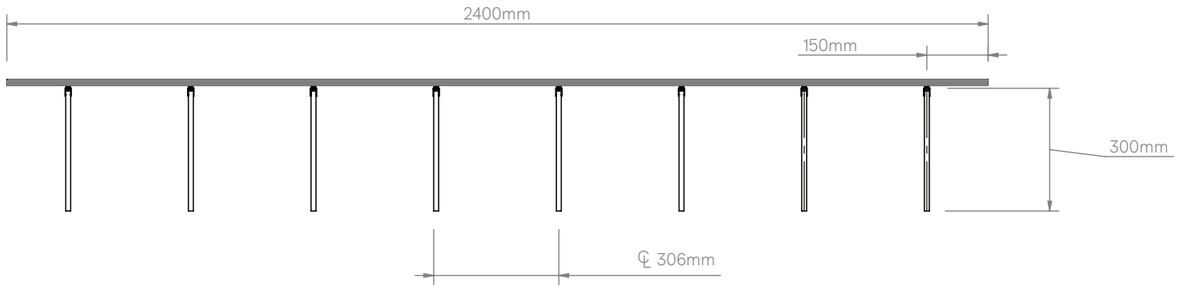

1x Pack of 12mm Fins = 5.76m²

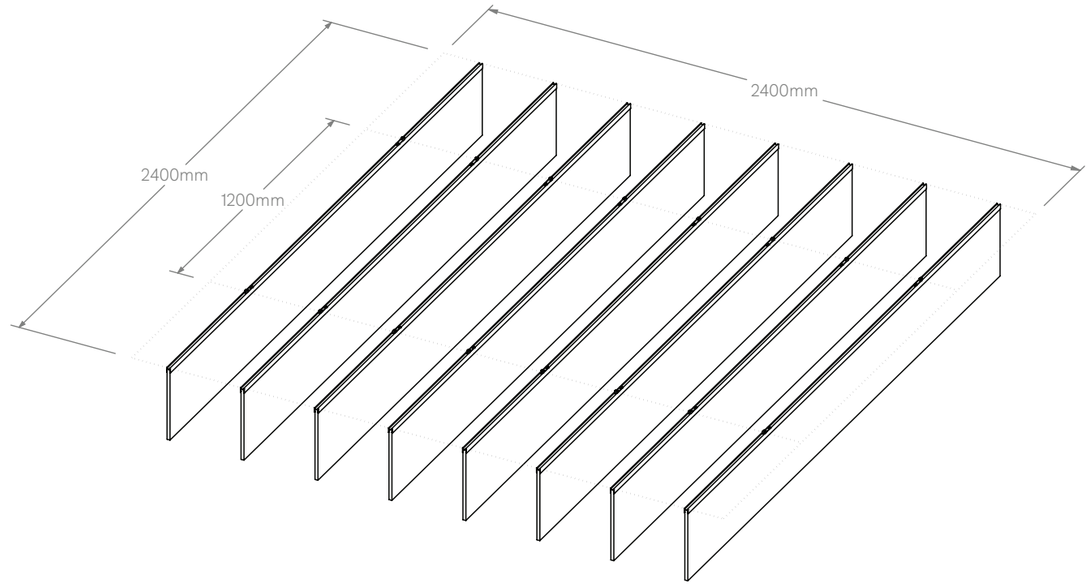

1x Pack of 24mm Fins = 2.88m²

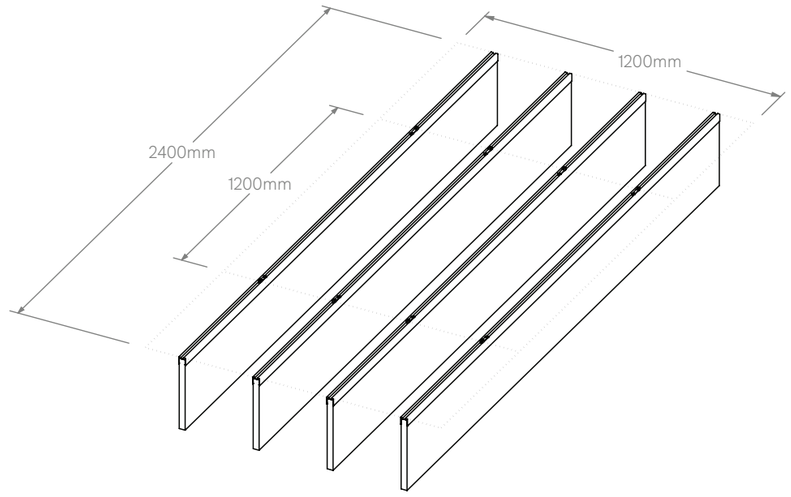

1.

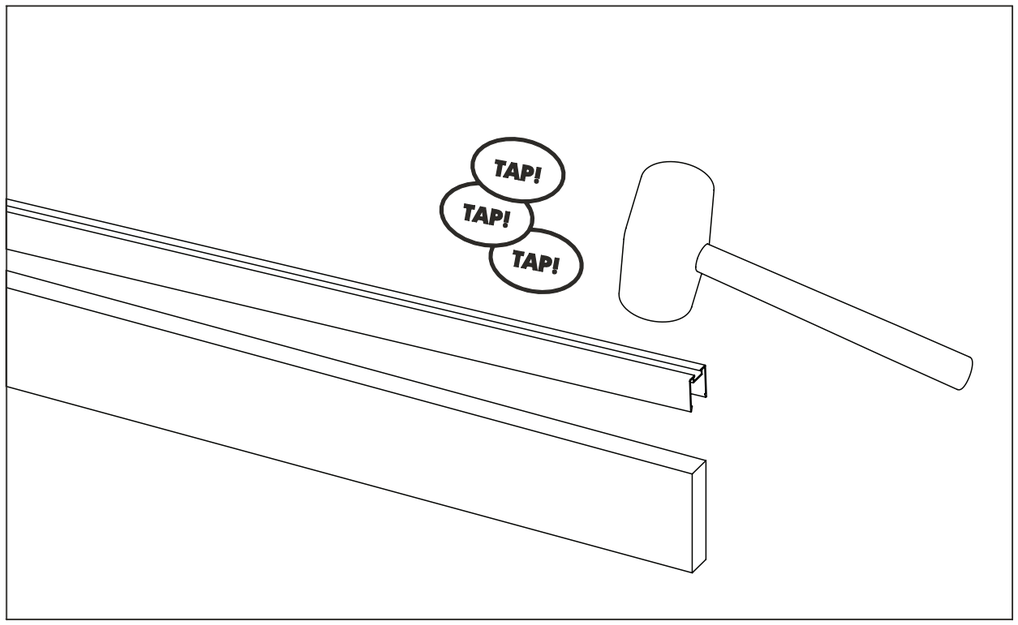

Using a rubber mallet, seat the channel onto the fin.

2.

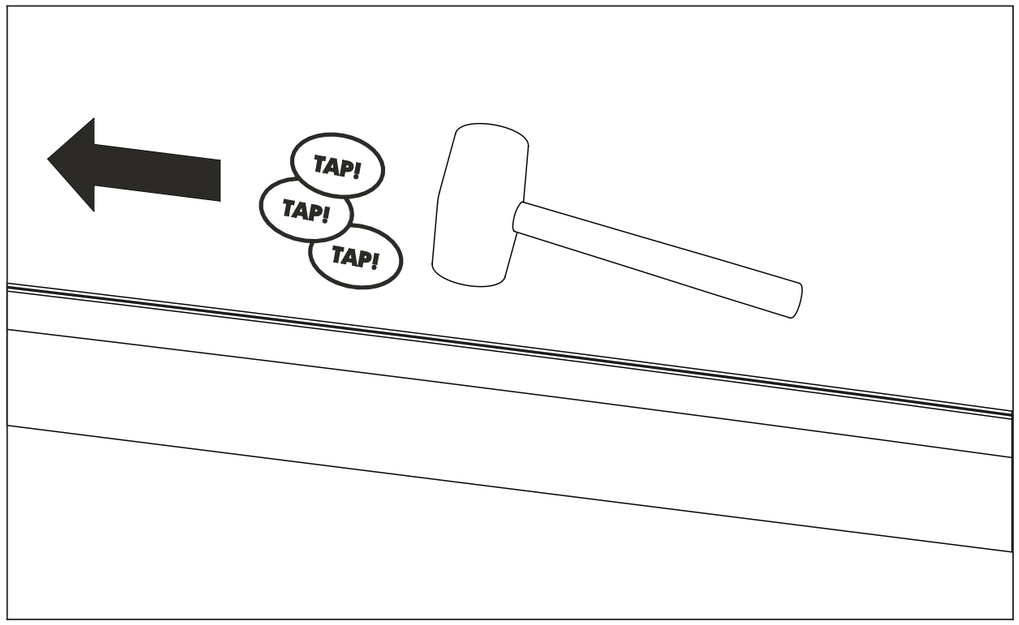

Starting at one end and using the mallet, tap along the length of the channel to ensure there is no bowing in the centre and the channel is seated correctly.

3.

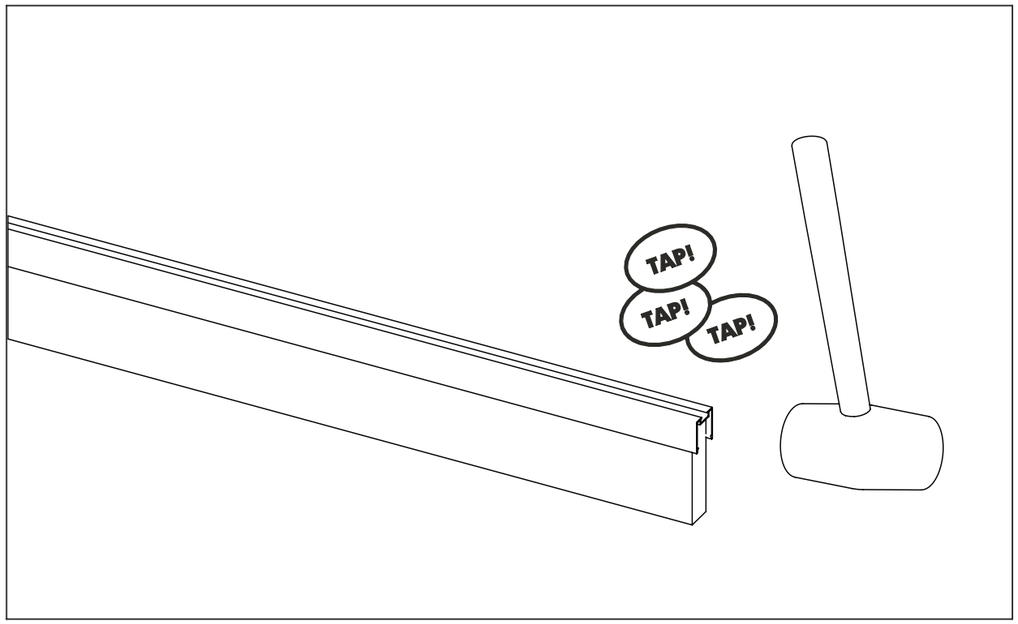

Ensure the end of the channel is aligned with the Frontier Fin by tapping the overhanging end of the extrusion.

4.

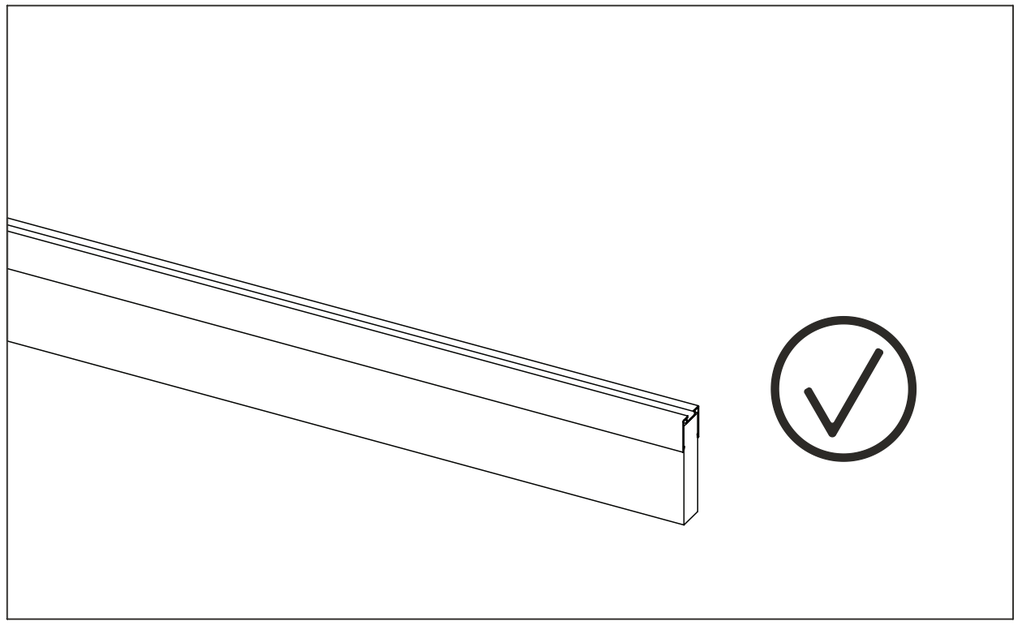

The Frontier Fin is now ready for installation to the ceiling.

1.

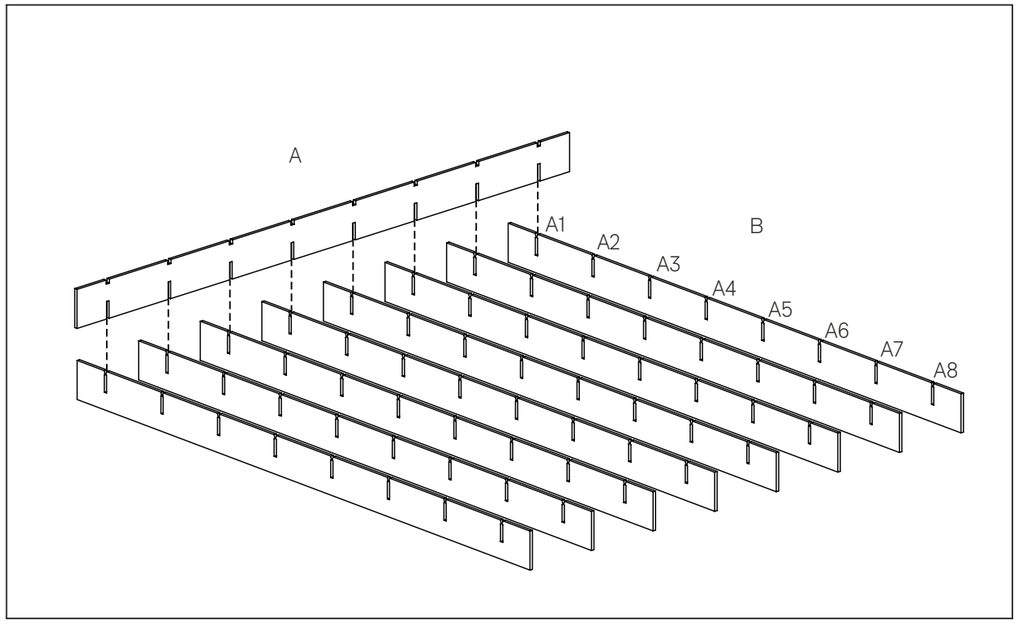

In the Frontier Axis pack there are two types of Fin (A and B). Part A has two notches and the small notch should be facing up when inserted into Part B.

2.

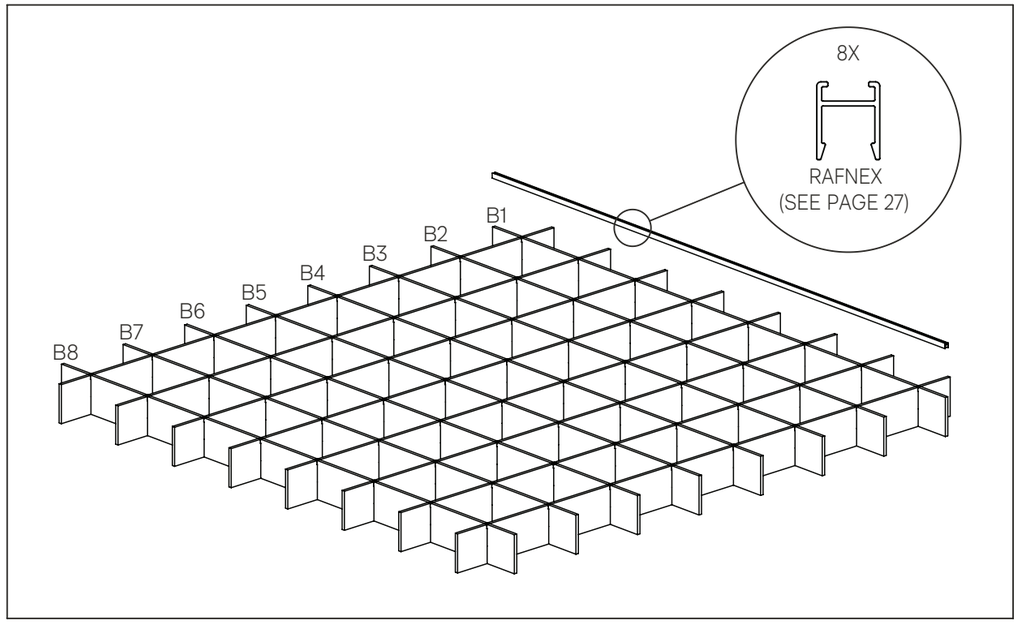

Using a rubber mallet, attach the 8x Rafnex channels along the lengths of the 'B' fins to lock the Axis Fins together in a grid.

3.

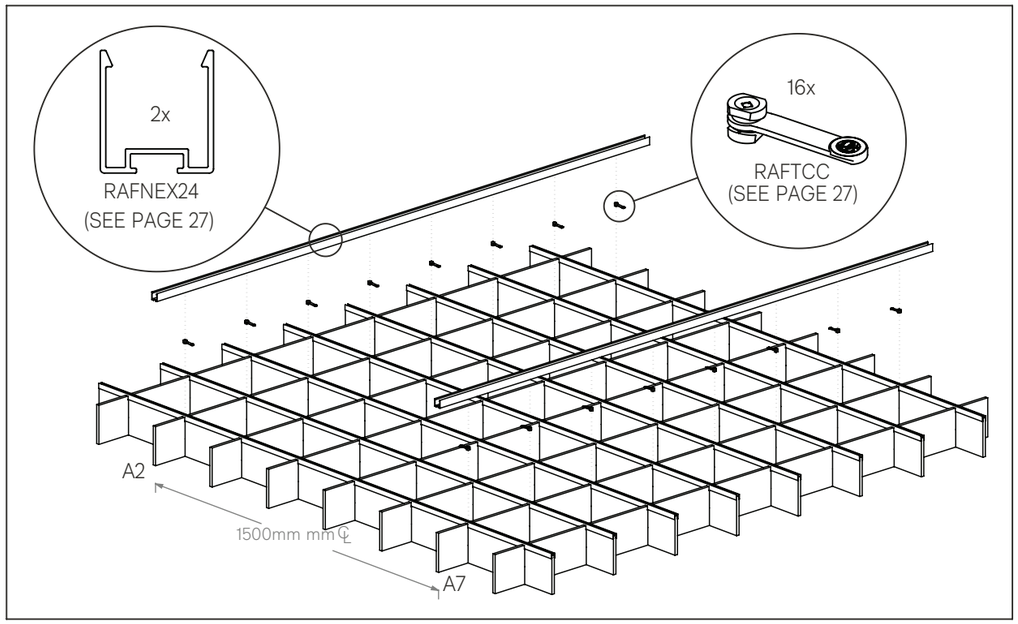

To attach the included 2x RAFNEX24 cross rails, first clip the 16x Autex Mounting Clips at the intersection points along the A2 and A7 Rails. Press the Crossrail onto the clips so they click into place.

4.

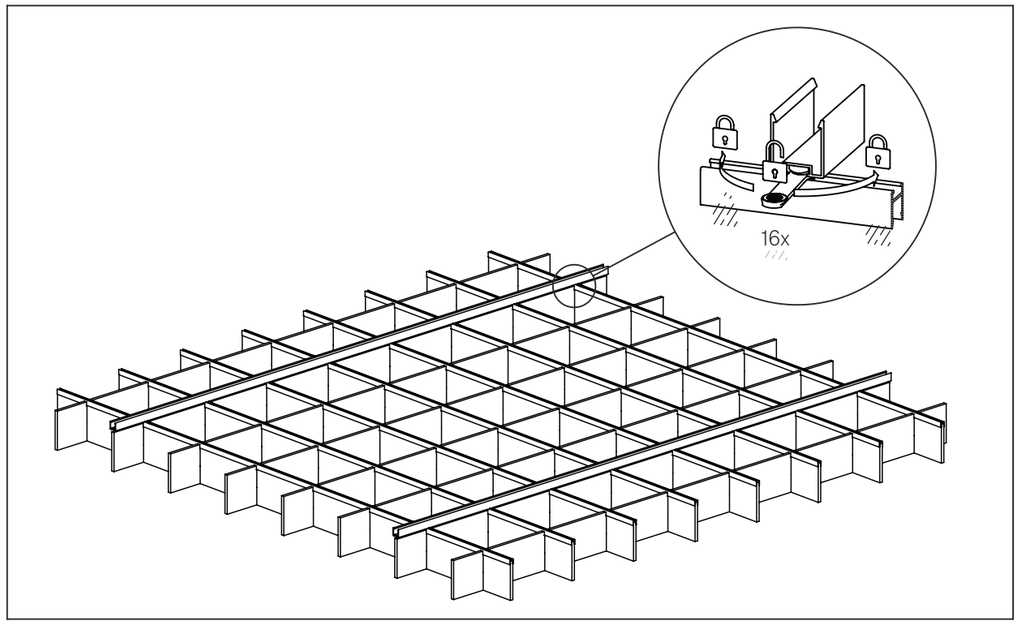

Twist the Autex Mounting Clips 90° to lock them off. The Frontier Axis Grid is now ready for installation to the ceiling.

CEILING SETOUT

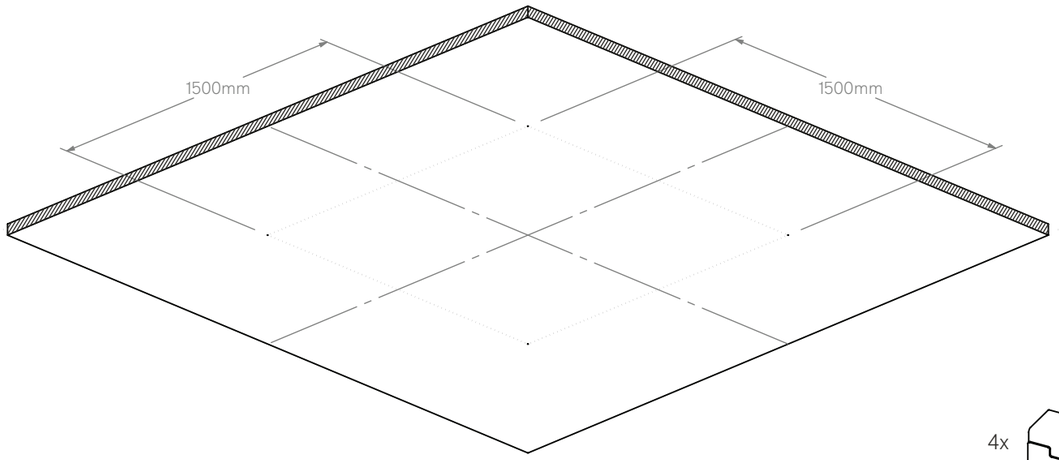

*Can be replaced by a rigid suspension set if required. See pages 7-11 for suggested details

4x

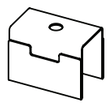

RAFWCP
(SEE PAGE 27)

4x

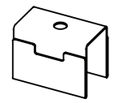

RAFWCP
(SEE PAGE 27)

+

2X
SETS

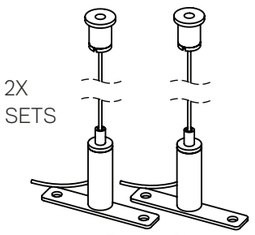

RAHVAS*
(SEE PAGE 27)

DIRECT FIX TO CEILING

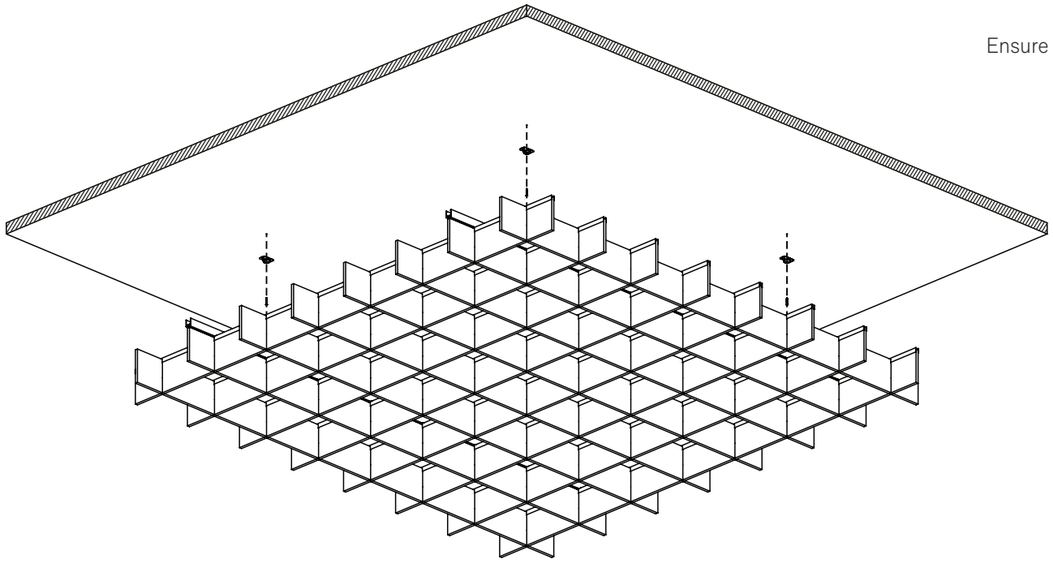

Ensure suitable fasteners for substrate are used
(NOT SUPPLIED)

SUSPENDED FROM CEILING

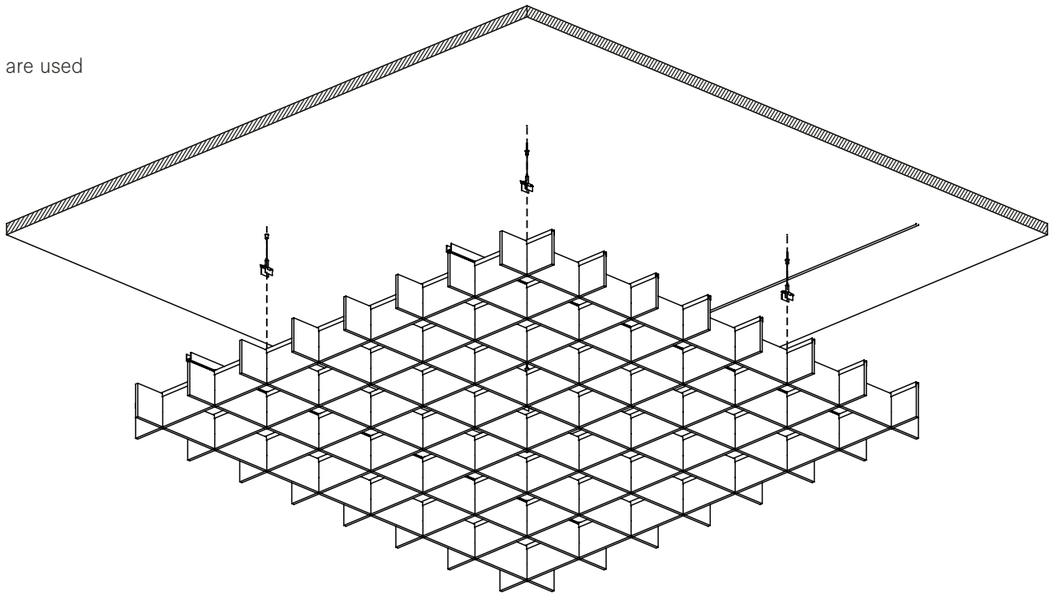

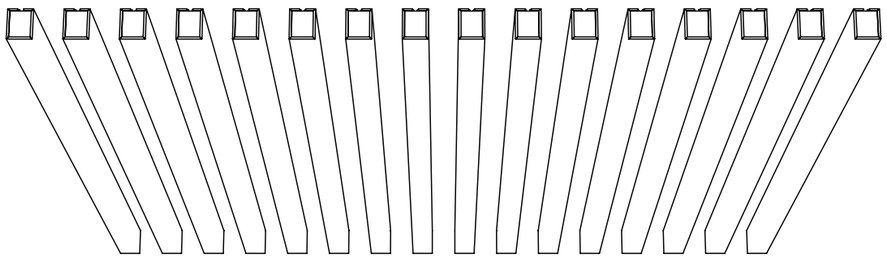

RAFT BEAM 100
2X PACKS SHOWN

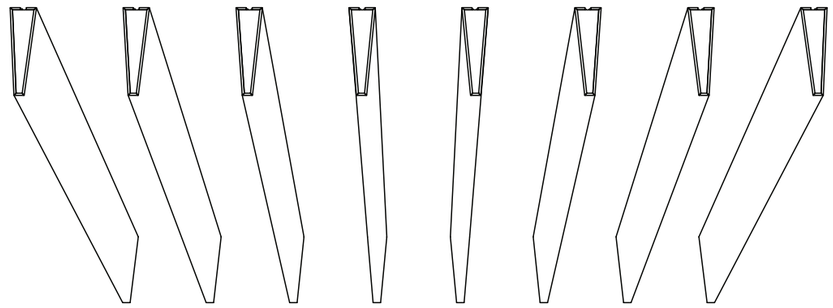

RAFT BLADE
2X PACKS SHOWN

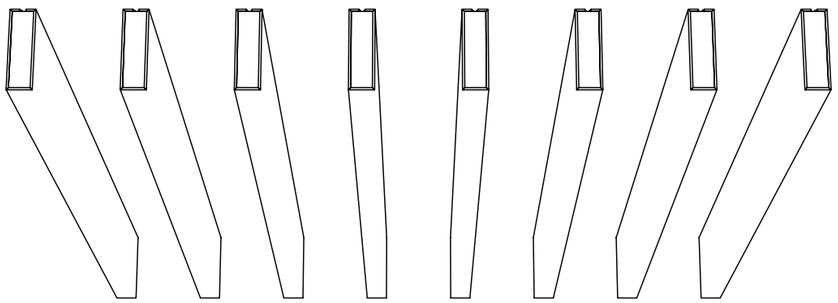

RAFT BEAM 250
2X PACKS SHOWN

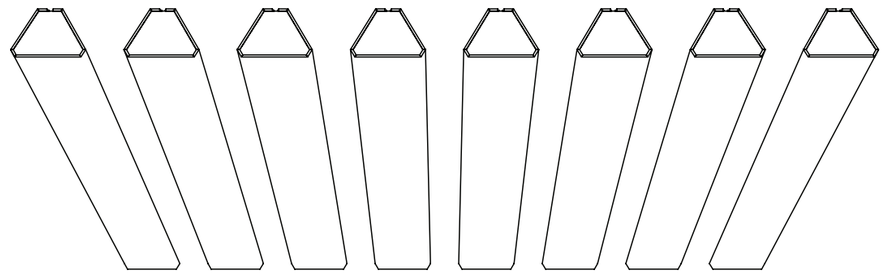

RAFT TRAPEZOID
2X PACKS SHOWN

BEAM 100

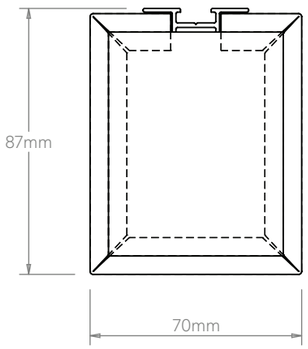

BEAM 250

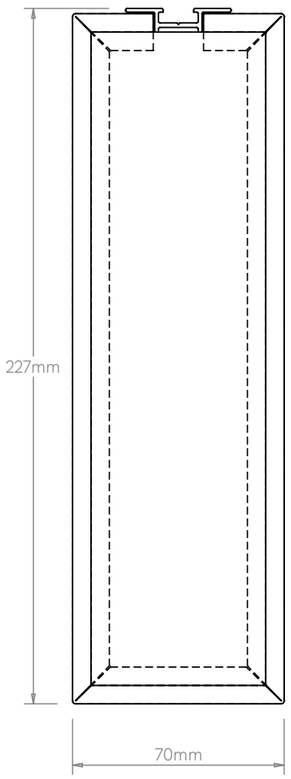

BLADE

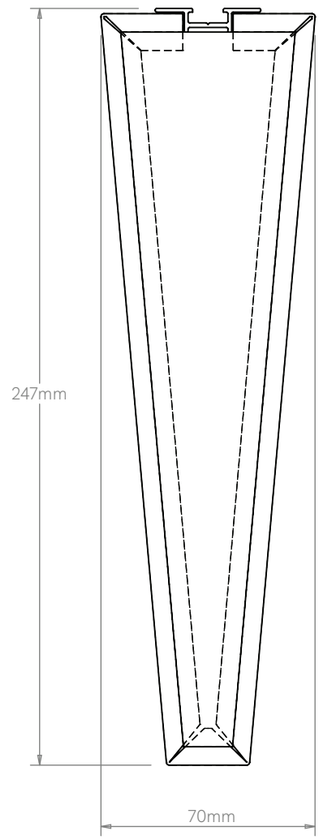

TRAPEZOID

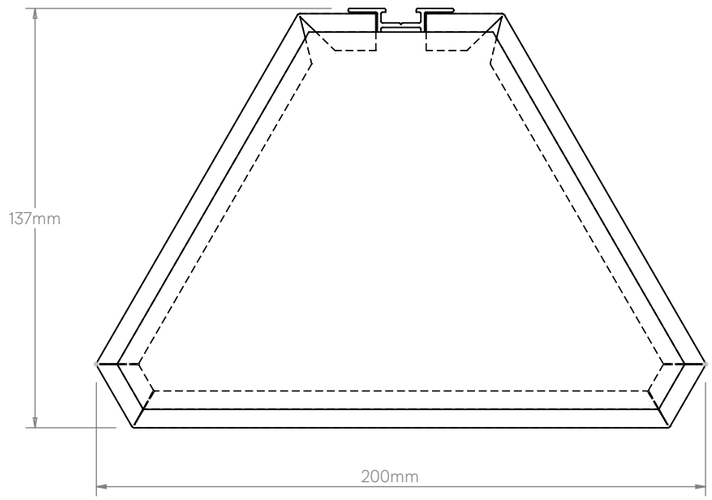

NOTES

- Raft height is inclusive of the Autex frontier Raft Extrusion
- Refer to page 24 for recommended Raft spacing

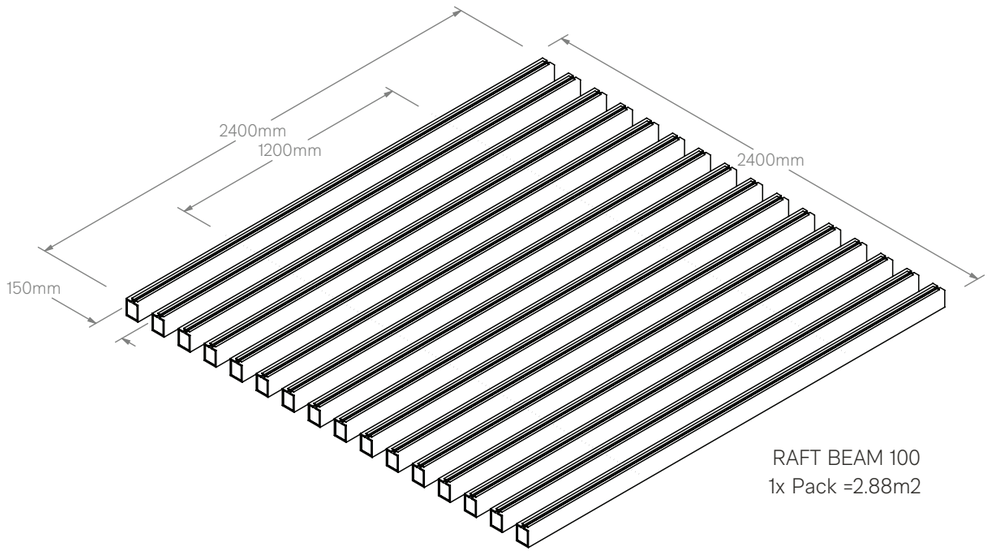

RAFT BEAM 100
1x Pack =2.88m2

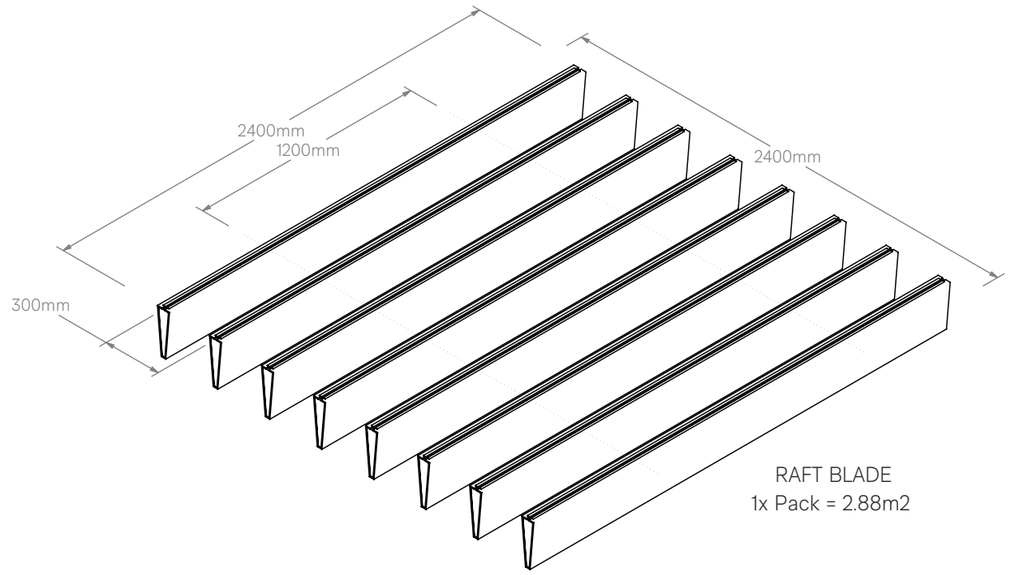

RAFT BLADE
1x Pack = 2.88m2

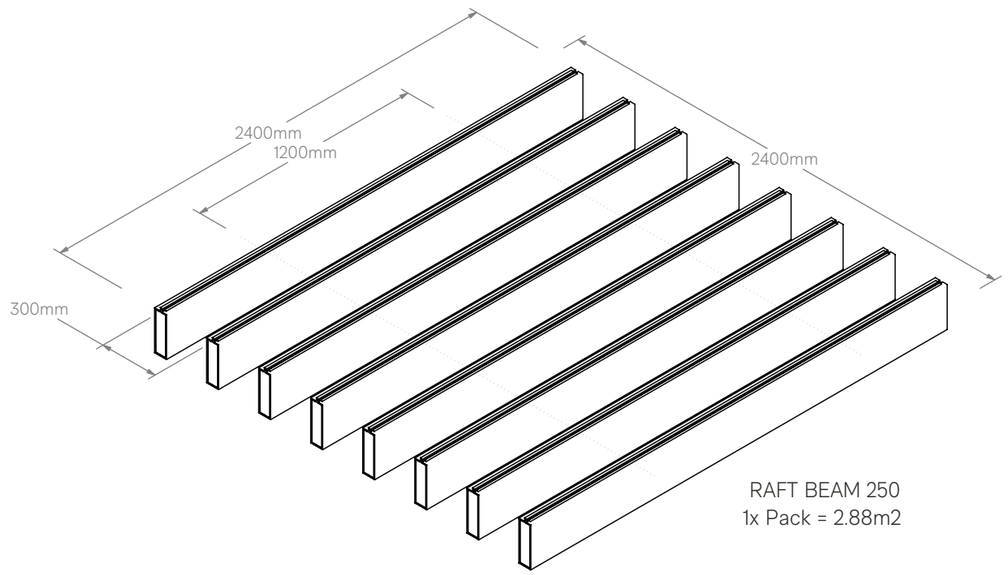

RAFT BEAM 250
1x Pack = 2.88m2

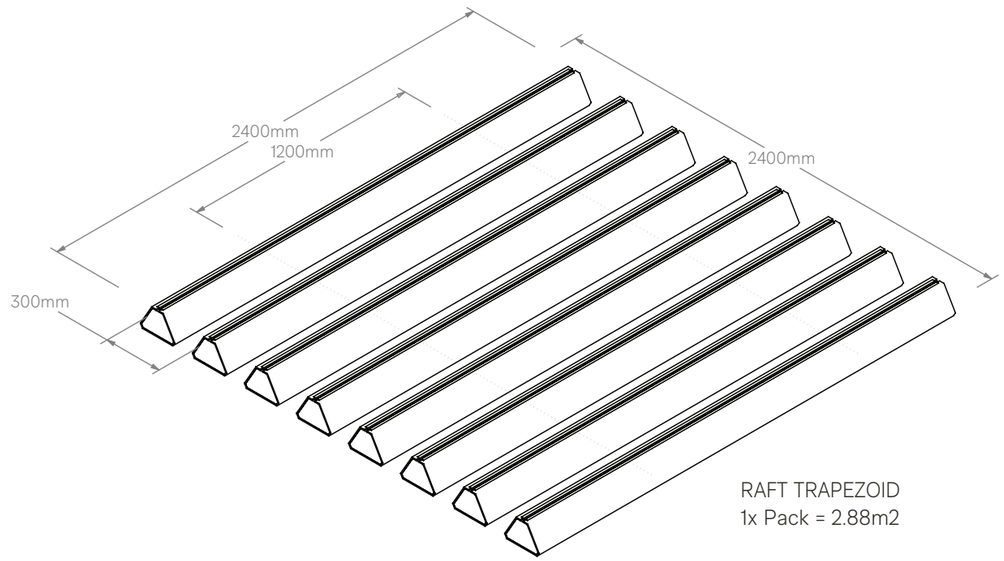

RAFT TRAPEZOID
1x Pack = 2.88m2

BEAM 100

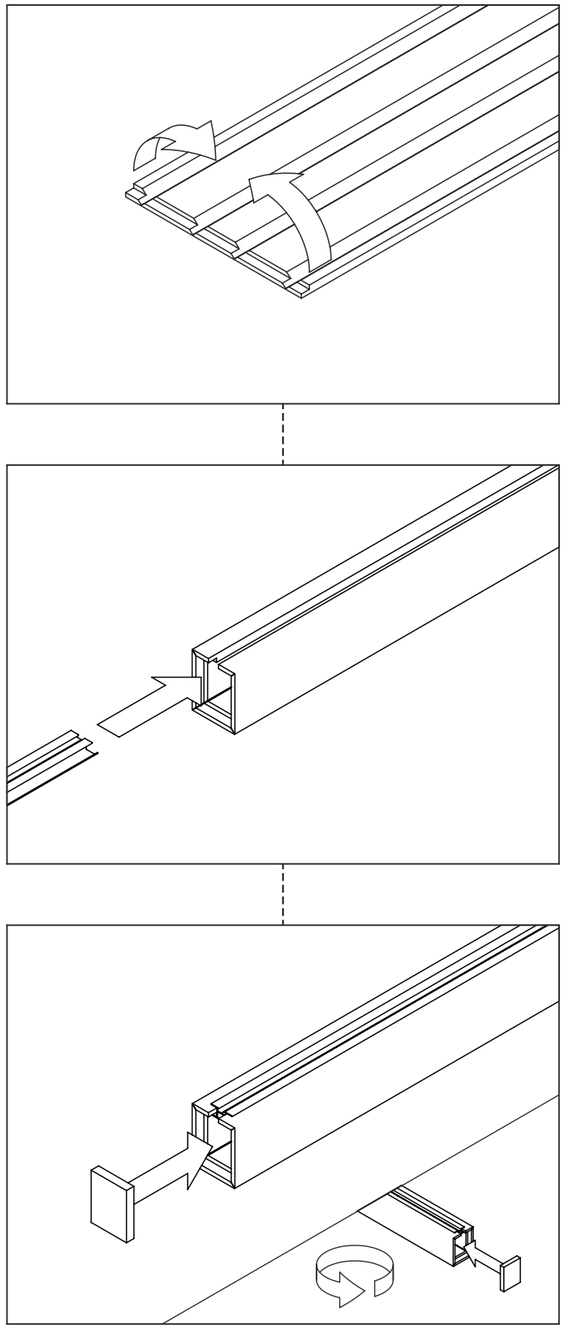

BEAM 250

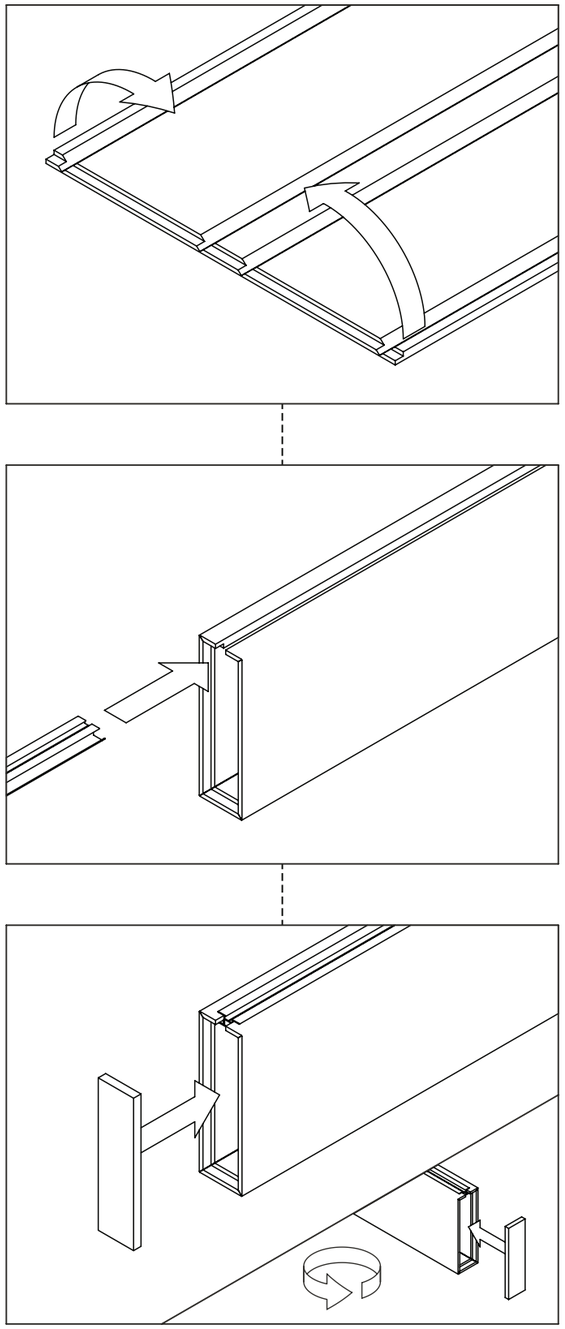

BLADE

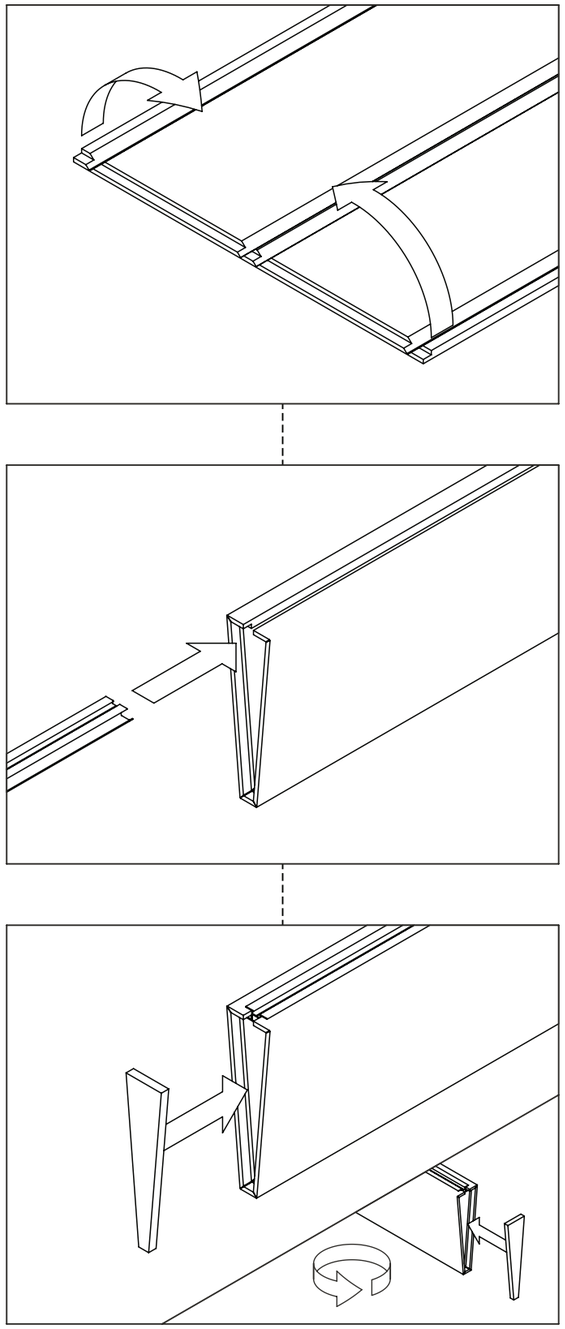

TRAPEZOID

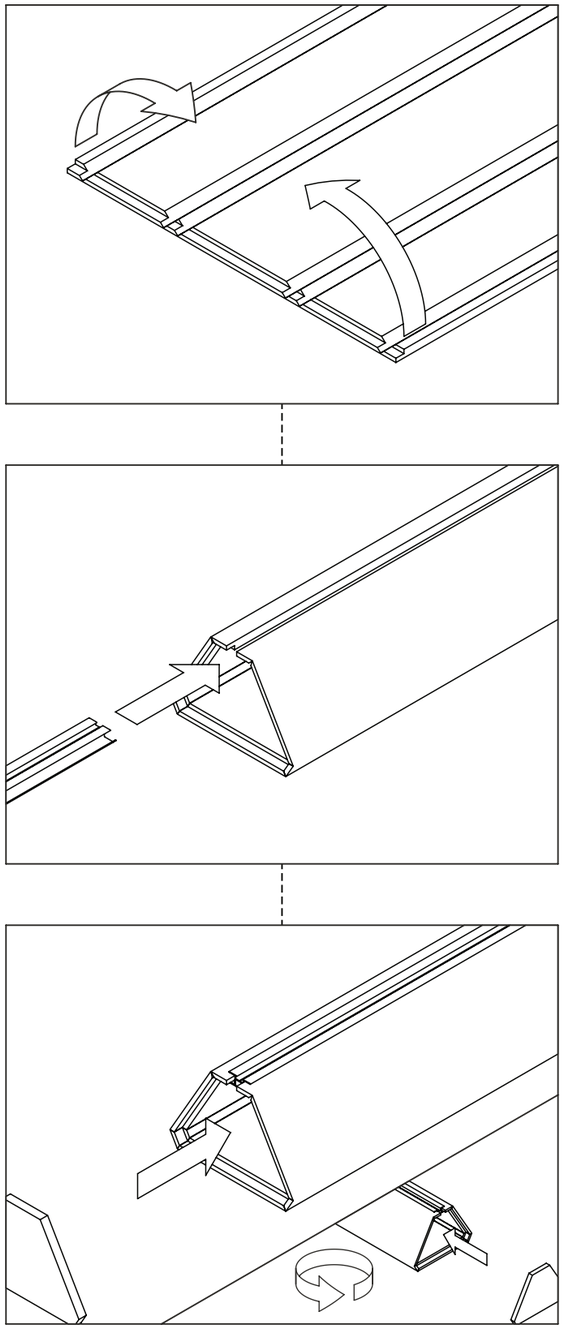

RAFCCT

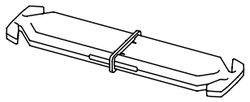

Light duty plastic connector used to join direct fixed rails.

Both joiners are compatible with all extrusion sizes.

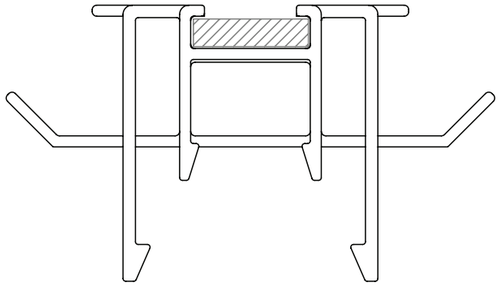

RAFHDCC

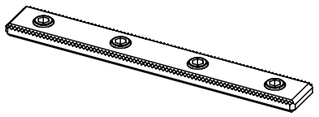

Heavy duty diecast connector with 4x grub screws used to join cross rails and/or suspended rails.

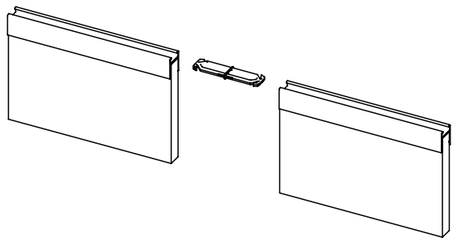

NOTE: A gap smaller than 1mm will be present between the extrusions.

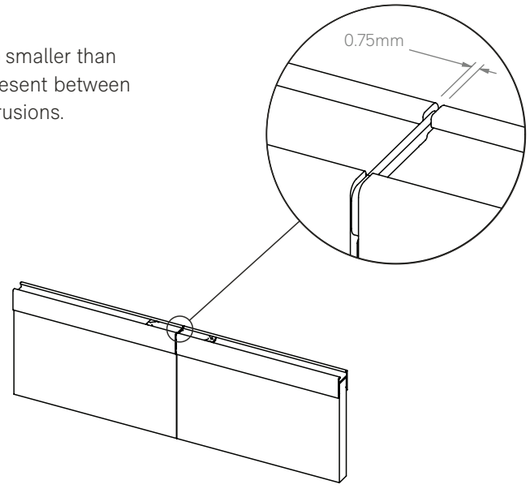

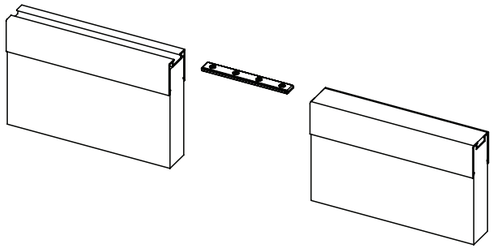

NOTE: Grub screws to be tightened to secure joiner in place.

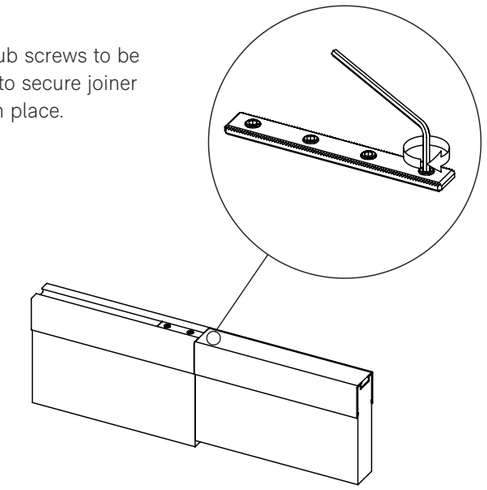

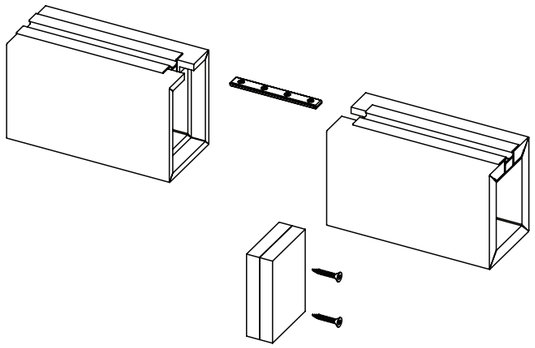

NOTE: In addition to joiner, screw the end caps together to create a cleaner join.

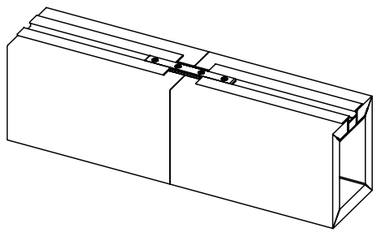

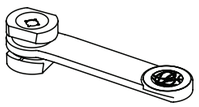

RAFTCC
Autex Mounting Clip

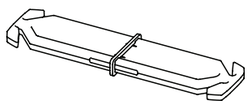

RAFCCT
Autex Frontier Channel Connector

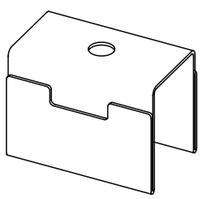

RAFWCP
Autex Removable W-Clip

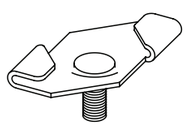

RAFM6GC
24mm Ceiling Grid Connector with
M6 Thread

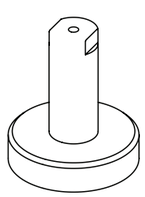

RAFM6MP
Magnet Pot with M6 Thread and
Cable Adaptor

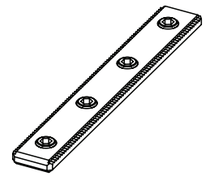

RAFHDCC
Autex Heavy Duty Frontier
Channel Connector with
4x M5 Grub Screws

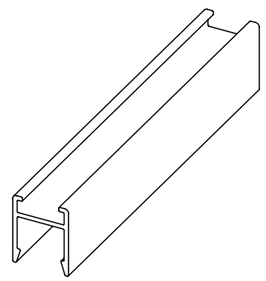

RAFNEX
Frontier 12mm Extrusion

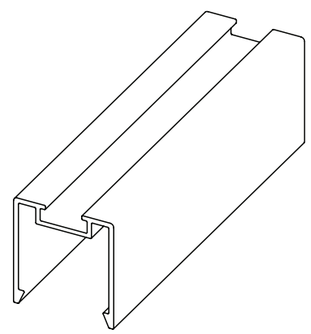

RAFNEX24
Frontier 24mm Extrusion

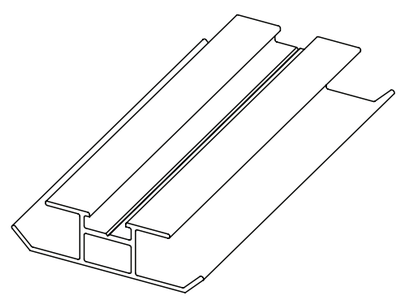

RAFNEXRT
Frontier Raft Extrusion

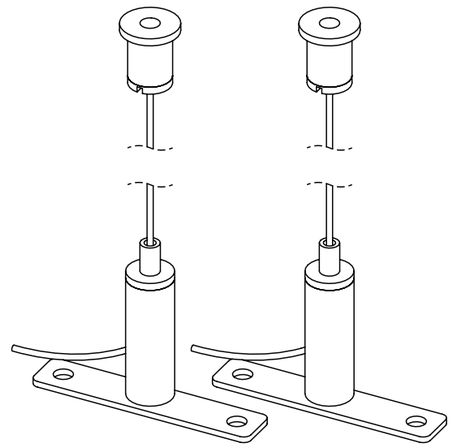

RAHVAS
Autex Adjustable
Suspension Set 1m
cable - Channel Connection

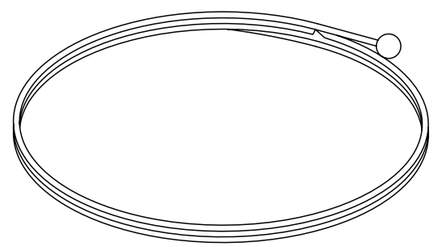

3m Steel Cable with Ball
End

*Not supplied by
Autex, speak to Autex
Account Manager for
supplier options.

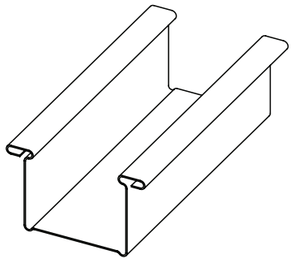

RONDO 129
28mm Furring Channel

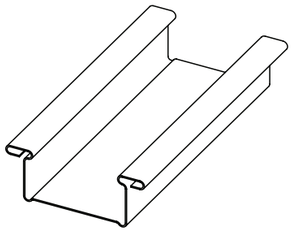

RONDO 308
16mm Furring Channel

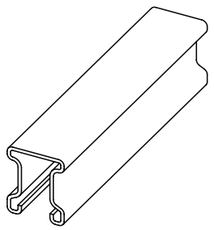

RONDO TCR 127
25mm Top Cross Rail

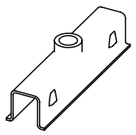

RONDO 119
U Clip

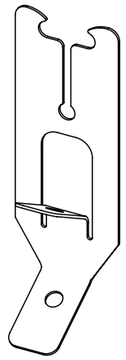

RONDO 2534
Top Cross Rail
Suspension Clip

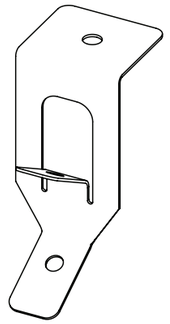

RONDO 547
Adjustable Suspension Hanger
(Concrete)

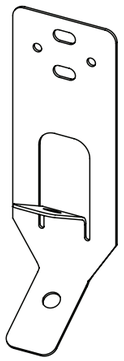

RONDO 534
Adjustable Suspension Hanger
(Purlins)

RONDO 121
5mm Soft Galvanised Suspension
Rod

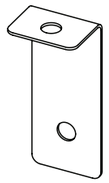

RONDO 247
121 to Concrete

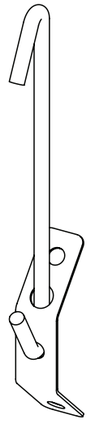

RONDO 719
Adjustable
Suspension Clip

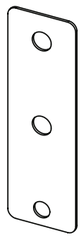

RONDO 274
121 to Timber
/Steel Joist

NOTE

Rondo components are supplied by a 3rd party and may not be available in all territories.

Other brands may have comparable components. Check with your account manager.

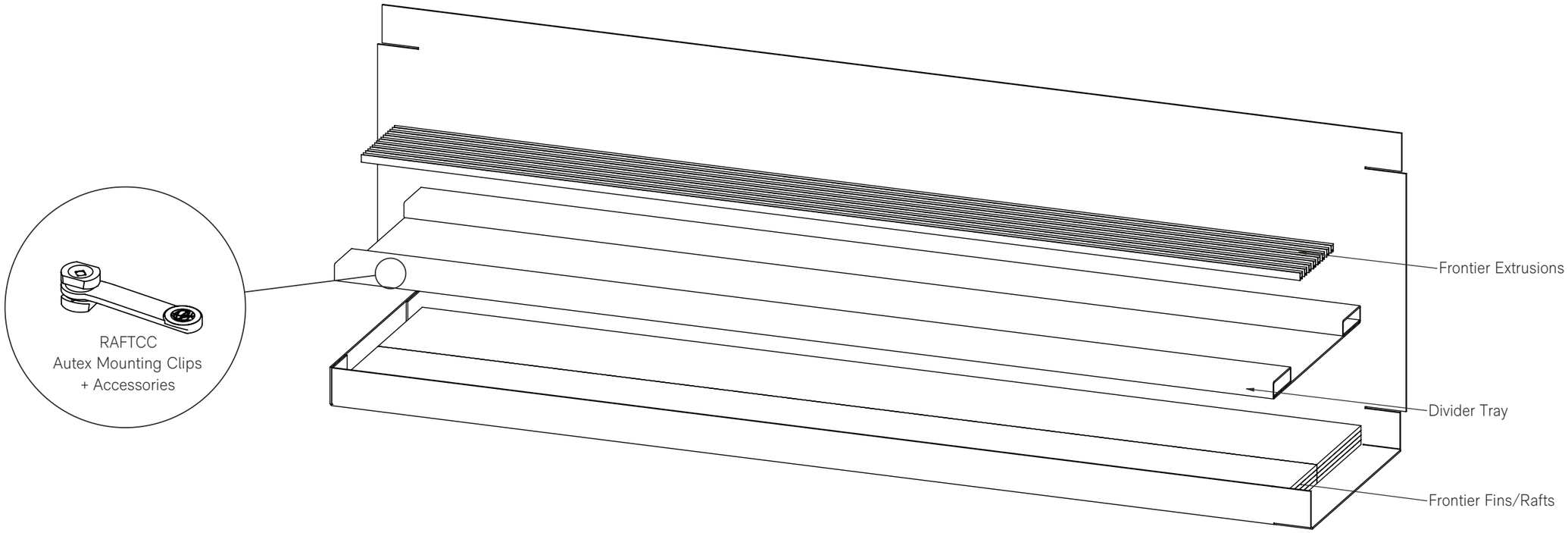

STYLE	FIN LENGTH (mm)	FIN THICKNESS (mm)	FIN DEPTH** (mm)	FIN SPACING (mm)	FINS PER PACK	MOUNTING CLIPS	AREA PER PACK (m²)
TUNDRA	2400	12	100	100	24	48	5.76
	2400	12	150	150	16	32	5.76
	2400	12	200	200	12	24	5.76
	2400	12	300	300	8	16	5.76
	2400	24	100	100	12	24	2.88
	2400	24	150	150	8	16	2.88
	2400	24	200	200	6	12	2.88
	2400	24	300	300	4	8	2.88
WAVE/DRAPE/ RIPPLE/GLIDE	2400	12	150	150	16	32	5.76
	2400	24	150	150	16	32	5.76
DUNE/SIERRA/TALUS	2400	12	300*	300	8	16	5.76
	2400	24	300*	300	4	8	2.88
AXIS	2400	12	150	300	16	16	5.76

RAFT STYLE	RAFT LENGTH (mm)	RAFT WIDTH (mm)	RAFT DEPTH** (mm)	RAFT SPACING (mm)	RAFTS PER PACK	MOUNTING CLIPS	AREA PER PACK (m²)
BEAM 100	2400	70	87	150	8	16	2.88
BEAM 250	2400	70	227	300	4	8	2.88
BLADE	2400	70	247	300	4	8	2.88
TRAPEZOID	2400	200	137	300	4	8	2.88

*The Fin Depth of DUNE/SIERRA/TALUS fins vary but average out to 300mm **Fin/Raft Depth is inclusive of extrusion